AMSAT
RADIO AMATEUR SATELLITE CORPORATION

PROCEEDINGS OF THE AMSAT-NA

29th Space Symposium and
AMSAT-NA Annual Meeting

November 4-6
2011
San Jose, California

This copy of the AMSAT Symposium Proceedings was assembled by concatenating the original PDF files that were sent to the printer, using the freeware “PDF Split and Merge Basic” program.

This program does not number the pages of the resulting PDF file in the same manner as the Proceedings volume that was originally produced by the printer. For this reason, the page numbers in the table of contents are not correct.

As compensation for the incorrect page numbers, those papers that were originally submitted in color are reproduced here in color. (The original printed Proceedings volume was produced only in Black and White.)

Copyright 2011
The Radio Amateur Satellite Corporation

All Rights Reserved. No part of this work may be reproduced
in any form except by written permission of the publisher.
All rights of translation are reserved.

Printed in USA

First Edition

TABLE OF CONTENTS

Welcome: Barry Baines, WD4ASW ____ i

SECTION I: ARISSat-1

Fabrication, Integration and Testing of ARISSat-1
David Jordan, AA4KN, Lou McFadin, W5DID, Joseph Armbruster, KJ4JIO ____ 1

Decoding Satellite Telemetry from ARISSat-1
Douglas D. Quagliana, KA2UPW/5 ____ 9

ARISSat-1 Operational Survey
Steven Bible, N7HPR ____ 25

SECTION II: FOX

New Strategy for AMSAT Fox CubeSat
Tony Monteiro, AA2TX ____ 29

AMSAT Engineering Documentation
Tony Monteiro, AA2TX ____ 37

Fox-1 Concept of Operations
AMSAT Fox Engineering Team ____ 39

Fox-1 System Requirements
AMSAT Fox Engineering Team ____ 45

Space Radiation and the Fox Program
Tony Monteiro, AA2TX ____ 55

Fox-1 Systems Overview
AMSAT Fox Engineering Team ____ 61

Fox-1 Thermal Design
Dick Jansson KD1K ____ 77

Fox CubeSat Mechanical Design
Robert Davis KF4KSS ____ 89

Orbital Elements and Magnetic Tumble in Excel
Robert Davis KF4KSS ____ 105

2010-2011 AMSAT NextGEN Program Satellite Report
Alexander J Harvilchuck, Kirstie Caesar, Joseph Gilley, Michael Swift ____ 119

Section III: Legal and Regulatory

Frequency Allocation for Government-Funded CubeSats: NSF Paves The Way
Bryan Klofas, KF6ZEO ____ 165

Section IV: Satellite Operations and Ground Station Equipment

OSCAR Zero from a Satellite Operator's Perspective
Sawson Taheri -KG6NUB_____ 181

A Satellite-Portable Backpacking Trip to Rare California Grid Square CM79
David Palmer, KB5WIA_____ 195

Work Satellites with your HT!
Clint Bradford, K6LCS_____ 203

Section V: Satellites and Education

The Importance of Educational Outreach for AMSAT
Barry Baines, WD4ASW_____ 207

How to light the Candle
Nick Pugh K5QXJ_____ 223

SA AMSAT CubeSat Project "KLETSKous"
Hans van de Groenendaal, ZS6AKV_____ 233

ARISS and Education: Who will join AMSAT in 2031?
Mark Steiner, K3MS, Rosalie White, K1STO, Debbie Brown Biggs_____ 237

AMSAT®
The Radio Amateur Satellite Corporation
850 Sligo Avenue, # 600
Silver Spring, MD 20910
Phone 301-589-6062 Fax 301-608-3410

Welcome to San Jose!

It is with great pleasure that I personally welcome you to the 2011 AMSAT Annual Meeting and Space Symposium. Once again, this meeting continues a tradition started in the early 1980's to provide an annual forum for amateur satellite enthusiasts to gather and share their ideas. This year, we celebrate the 50th anniversary of the launch of OSCAR 1, built by members of Project OSCAR right here in the San Jose area and launched on 12 DEC 1961 from Vandenberg AFB, located down the coast from here. Our banquet speaker, Lance Ginner, K6GSJ (an OSCAR 1 builder) will highlight the story of how amateur radio was initially placed in orbit.

The successful deployment of amateur radio's latest satellite, ARISSat-1/Kedr on 3 AUG 2011 is certainly the highlight for AMSAT this year. Many of us watched on NASA TV as the deployment occurred during a Russian EVA. ARISSat-1/Kedr continues to function only in daylight due to the loss of the Orlan Spacesuit Battery and the amateur radio linear transponder is functioning despite damage to the 70 CM receive antenna which occurred prior to actual deployment. World-wide interest in ARISSat-1/Kedr is reflected the number of stations that have downloaded and forwarded telemetry data from the satellite and Kursk Experiment to a telemetry collection ftp site, the number of stations submitting applications for 'reception certificates', and the number of SSTV images received by stations and subsequently posted on the ARISS SSTV website.

While ARISSat-1/Kedr continues to draw interest, AMSAT is now focusing on our next project, Fox. During the Symposium you will see several presentations that discuss the engineering work being conducted in the development of AMSAT's first cubesat.

Two governmental issues impacted AMSAT this year. H.R. 607, a bill introduced by Rep. Peter King (R-NY) included a provision that could have led to the potential loss of the 70 CM band allocated to the Amateur Satellite Service. Thanks to the efforts of AMSAT BOD member Alan Biddle, WA4SCA (who led AMSAT's letter writing campaign) and AMSAT Area Coordinator Peter Portanova, WB2OQQ (who arranged a meeting in May with Rep. King and led a delegation that included local ARRL officials), the congressman recognized the negative consequences of this bill to AMSAT and amateur radio and agreed to change it. Meanwhile, ITAR continues to be a concern as AMSAT submitted comments to the DDTC (Directorate of Defense Trade Controls) in June regarding proposed changes to ITAR and what constitutes 'public domain.'

We have achieved much this year. After forty-two years, Amateur Radio in space continues to provide us with remarkable satellites and educational opportunities. Your support will provide a bright future.

73,

Barry A. Baines, WD4ASW
President

FABRICATION, INTEGRATION and TESTING of ARISSat-1

IN ORLANDO, FLORIDA

Those who have never volunteered to help in the development of an amateur satellite are probably unaware of the many tasks that must be done to ensure the spacecraft is ready for its journey into space. The purpose of this paper is to summarize a few of the main tasks that were performed by the ARISSat-1 project team in Orlando to prepare ARISSat-1 for deployment.

by

David Jordan, AA4KN, Lou McFadin, W5DID, Joseph Armbruster, KJ4JIO

ARISSat-1 Team Orlando

INITIAL EFFORTS

Suitsat I was a project where, in February of 2006, a small VHF hand held ham radio was installed in a retired Russian Orlan spacesuit and sent into orbit from the ISS, beaconing messages to hams on Earth.

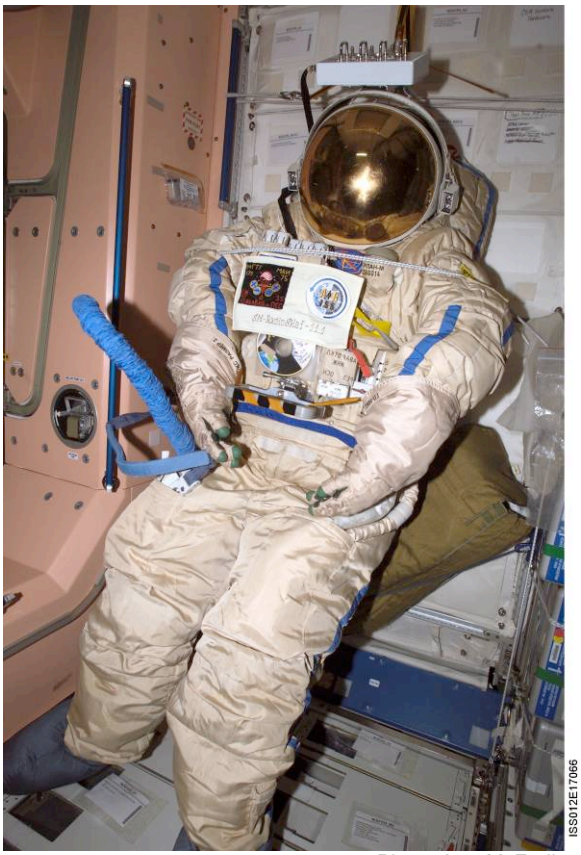

Photo: Lou McFadin

Suitsat 1 on board the ISS

After the success of Suitsat 1 in 2006, the team decided to build a second Suitsat called Suitsat 2. At first, the going was slow. The plan was to include some of the features that were not implemented on Suitsat 1. That included a linear cross band transponder, cameras, SSTV images and solar panels attached to the outside of the suit. This was a particularly difficult problem, since no one could come up with a method for attaching the panels that would meet the engineering requirements and at the same time pose no safety issues for the astronauts/cosmonauts.

Photo: Lou McFadin

Proposed Suitsat 2 spacesuit

Leading up to the summer of 2009, the ARISS and AMSAT organizations were deeply involved in the development of Suitsat II. In July 2009, the ARISS organization suddenly found itself faced with a big decision. The Orlan suit that had been tagged for Suitsat II and was already waiting on the ISS was discarded to make more room for oncoming crews to the ISS. Allotted time was still secured to deploy Suitsat 2, but its container (the suit) had been removed.
After much discussion, it was decided that a special space frame would be designed to house the electronics. So the mission was again a "go" and was renamed ARISSat-1. In the following 18 months, the entire system was redesigned, built, tested and shipped to Moscow for delivery to the launch vehicle Progress. This would be considered a major achievement in any space project.

COORDINATION

Those who have never been involved with AMSAT in the development of an amateur radio satellite need to understand that it is a process where volunteers of diverse talents work very closely together on tasks, but in most cases are located far away from each other. Gould Smith WA4SXM took on the task of managing this diverse group of cats. Weekly telecons became the norm to provide a means of coordinating their efforts. In the case of ARISSat-1, much of the software and circuit board design fabrication and development was done by the Microchip team in Phoenix, Arizona. Tony Monteiro, AA2TX of North Andover, MA did most of the power supply and DSP software design including the testing of the MPPT units (Maximum Power Point converters). Folks all over the country were involved in the cables and other parts. Larry Brown, W7LB of Tucson, AZ assembled most of the cables, Chuck Green, N0ADI of Hayden, ID helped with assembling cameras and the MPPT units. Phil Karn, KA9Q from San Diego, CA developed an entirely new telemetry encoding algorithm especially for this satellite.

At the same time all this activity was taking place, the task of designing an entirely new structure was tackled by Bob Davis, KF4KSS of Pokomoke City, MD along with a design team he assembled. In addition to fabricating, assembling and integrating the spacecraft, additional work had to be done to assemble the necessary equipment for conducting the vibration and thermal vacuum (TV) testing. This was carried out in Orlando, Florida under the direction of ARISS Hardware Manager, Lou McFadin, W5DID.
In the month of June 2010, final assembly and testing of ARISSat-1 began in Orlando. George Pressley, K4RSV graciously allowed the Orlando ARISSat team to use a portion of his personal garage lab to finish assembly and testing of ARISSat-1.

Photo by D. Jordan, AA4KN
ARISSat-1 integration test area in Orlando, FL.

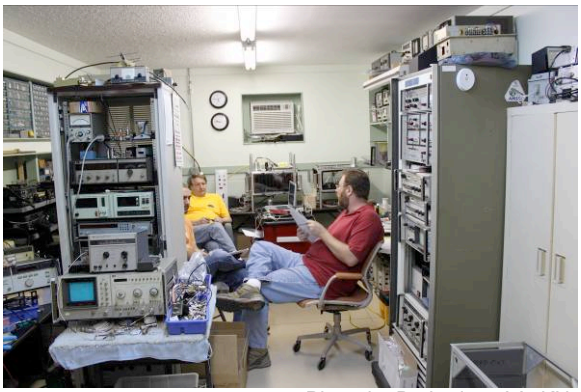

Photo by D. Jordan, AA4KN

ARISSat-1 development and assembly lab

THERMAL-VACUUM TESTING

A very important part of testing is to determine that the spacecraft would be totally functional within its orbital environment after being deployed. To do this, a Thermal Vacuum Test chamber or Thermal-Vac chamber was needed. The Thermal Vacuum Chamber that was used for testing some components of P3D (AO40) was still around in pieces. Joe Armbruster, KJ4JIO and Dave Jordan, AA4KN acquired two push carts from Home Depot and converted them into a single cart to hold the chamber. The chamber itself was assembled with the help of Stan Wood, WA4NFY who had worked on the original P3D project and was familiar with the chamber. Additional help came from Joe Armbruster, George Presley and Bob Davis along with several members of the Lake Monroe Amateur Radio Society (LMARS). There were several major tasks involved in the assembly of the vacuum chamber. We had to find a way to cool and heat the components under test. Also, some 100 individual wires and two coaxial cables had to be routed in order to connect the modules under test to the test equipment outside the chamber. This was accomplished by using a heat exchanger plate with heater resistors and a fluid flow system to cool the plate. This fluid had to be completely liquid at the extremes of +100C to -70 C. Fortunately John Klingelhoeffer, WB4NM knew just exactly what we needed. Next, we had to build the vacuum tight wiring interface. We had to make sure (1) there was a clean, smooth surface between the vacuum bell jar and the mounting ring so a hermetic seal was maintained at all times and (2) no oil flow leaks existed. Once the assembly was complete, but before any testing could commence, we needed one more item … *dry ice*. Sounds easy until you have to find it. After some searching, we found a source at a local ice plant. That was fine until we ran out on a Saturday afternoon and the plant was closed. After a lot of phone calls, we found more available from a local food store chain which became our new source.

ARISSat-1 is actually a set of individual electronic modules that, once connected together, work as a single satellite. The thermal-vac testing is carried out by mounting the modules onto a thermal plate inside the thermal vacuum jar, bringing out circuit test point cables and temperature sensor wires from each module through the wiring interface mounted on the sides of the jar mount ring. Next, oil is pumped through a cooler containing the dry ice chilling it to minus 40C as it circulates through copper tubing on the module mounting board, allowing each module to reach temperature. All this happens as the chamber is pumped down to a vacuum level of about 0.1TORR, which is low enough to prevent water condensation from occurring within the chamber during test. The BPSK1000 telemetry signal was monitored during the testing to gather data.

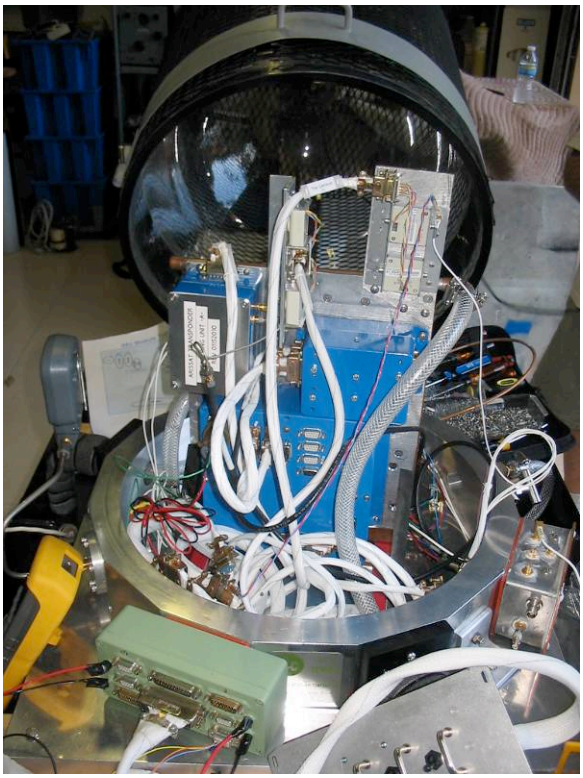

Photo: Joe Ambruster KJ4JIO

ARIssat-1 modules mounted to the thermal plate and ready for vacuum test

Photo: D. Jordan, AA4KN

L to R: Gould Smith, WA4SXM and Stan Wood, WA4NFY with Thermal – Vac test chamber in foreground.

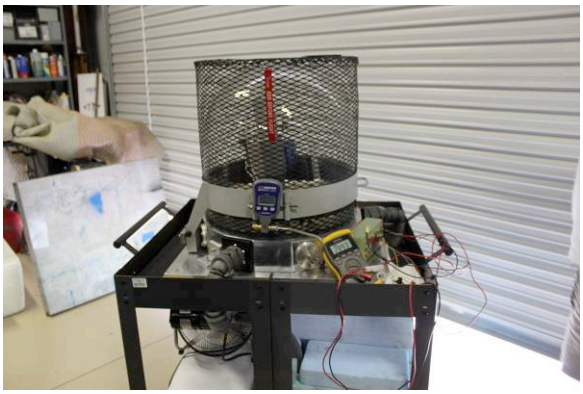

Photo: D. Jordan, AA4KN

Thermal-Vacuum Test Chamber. Note the protective implosion cage encasing the vacuum bell jar.

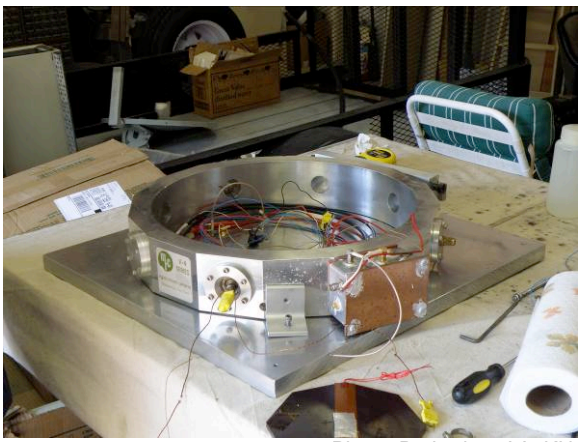

Photo: D. Jordan, AA4KN

Vacuum jar mount ring; The module mount board is placed inside this ring. Test point and temperature sensor cabling is brought out through the ports along the side.

Photo: D. Jordan, AA4KN

L to R: Bob Davis, Gould Smith, and Lou McFadin discussing the Thermal-Vac testing.

SOUND AND IMAGE DEVELOPMENT FOR ARISSAT-1

To be true to its education mission, ARISSat-1 would be expected to have a variety of transmission material of interest for students. It was decided early on that kids would be featured in most of the voice transmissions. David Jordan, AA4KN was in charge of acquiring and processing these sounds for the spacecraft. It was requested that female voices be used for the voice ID and for the voice telemetry. Two students from Orlando were chosen for this and recorded using a Roland Edirol R-1 digital recorder. A tone signifies the start of the telemetry string and is nothing more than a sampled "opened door" alarm from Dave's 2006 Chevrolet Trailblazer. The voice telemetry was recorded as a series of separate files such that they could be called out of memory to form sentences. For instance, separate files for the words *battery, voltage, is, three, five, dot, four and volts* would form a telemetry report segment stating, "*Battery voltage is three five dot four volts*". The sound files were processed using the sound editing program, Wavelab 2.0 and the finished product was generated as a 16 bit, 48 K sound file.
A backup telemetry file with a male voice recorded at 8 bit, 8 K is transmitted when the female voice on the SD card cannot be read.

In early 2009, requests were sent out worldwide asking that students submit recorded voice greetings to be transmitted from ARISSat-1 during its mission. A total of 24 greetings were accepted in 15 different languages and are currently being broadcast as part of the transmission string. In addition, students were also invited to submit digitized photos, artwork and documentation of projects they had created. These files would be stored on a memory chip. Once satellite assembly was completed, the chip would be attached to the satellite's space frame and flown during the mission. This project was called Fly a File. Eleven different educational groups from around the world are represented flying a total of 48 files. Images of the material being flown can be viewed at http://www.ariss-eu.org/arissat-1.htm.

Photo: courtesy of Sleepy Hill Elementary
Image submitted for the Fly a File project on board ARISSat-1. Students of Sleepy Hill Elementary in Lakeland, FL enjoy ham radio as part of their curriculum.

To finalize the editing process, Dave generated two SSTV ID images to appear at certain intervals between the SSTV camera still photo transmissions. These were designed with a bright yellow background so it would be easier to identify through deep fades that might occur. Both images host the ARISSat-1 logo; a deep blue silhouette of the spacecraft with the name "ARISSat-1" across the middle. The logo was created by Steve Kenwolf, WH6BSZ.

Photo: D. Jordan, AA4KN
One of two ARISSat-1 SSTV ID images

VIBRATION TESTING

One of the most important and challenging tests for ARISSat-1 was vibration testing. This testing was performed at Qualtest Inc. in Orlando, Florida, it began on September 15, 2010 and lasted for about a week.

ARISSat-1's assembly used hundreds of screws to attach cameras, the Kursk experiment, modules, and various cover plates, not to mention a large number of screws just to hold the space frame together. In order to ensure the screws wouldn't vibrate out during launch or vibration testing, they were secured either by inserting locking helicoils into their screw holes or by applying a thin coating of a solution called Vibra-Tite over the screw's threads. After curing, the Vibra-Tite provided a rubber-like surface across the threads preventing the screw from backing out during vibration.

SETTING UP FOR VIBRATION TEST

After arriving at the Qualtest facility, ARISSat-1 was unloaded and taken to the test area. Here it would eventually be mounted onto a large piston mechanism commonly referred to as a "shaker". The shaker unit we were assigned to use was produced by the LDS Company. During testing, the piston was energized by a varying magnetic field. This caused it to vibrate similar to a speaker voice coil vibration at the programmed frequency and level. Before testing was complete, the satellite was vibrated through the X, Y and Z axes for a specified duration of time and displacement.

Before any testing could begin, the vibration test equipment itself with the satellite's mounting brackets attached, had to be tested alone to eliminate any mechanical resonances. A resonance problem is many times caused by inadequate mounting of the bracket attachment to the shaker plate, which is used to support the DUT (device under test). We found that resonance problems did exist and the final remedy was to borrow a magnesium expansion plate from NASA KSC Vibration test branch which eliminated the problem. After several days of careful fine tuning of the shaker system and the replacement of a few loose screws, we were finally ready to test.

Once testing began, it was not something that could or should be rushed. It entailed a lot of standing around and waiting between vibration tests and then carefully monitoring ARISSat-1 telemetry and ARISSat-1 itself during testing in case any part of it decided to let go. Fortunately, there was only one incident in which a few screws backed out. This was earlier on, during the vertical or Z axis vibration and was quickly remedied.

Photo: D. Jordan, AA4KN

The LDS Vibration tester with ARISSat-1 shown on the left.

Photo: D. Jordan, AA4KN

ARISSat-1 in the foreground awaits mounting on the shaker plate to its left rear.

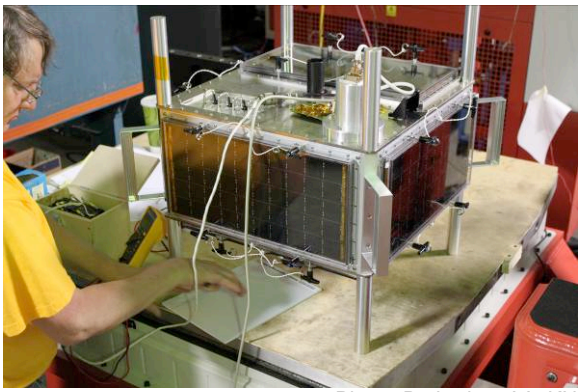

Photo: D. Jordan, AA4KN

Gould Smith, WA4SXM, prepares ARISSat-1 for its next vibration test.

Photo: D. Jordan, AA4KN

ARISSat-1 mated to the magnesium expansion plate from NASA KSC.

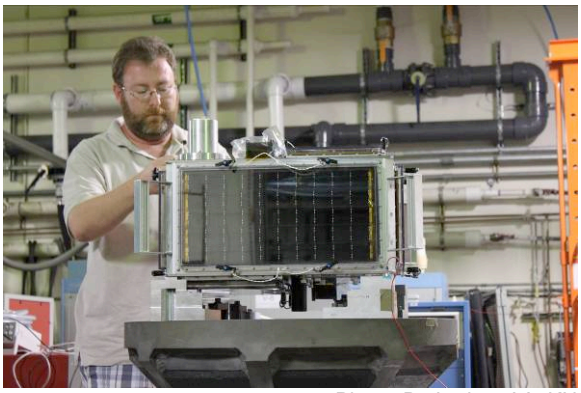

Photo: D. Jordan, AA4KN

Bob Davis, KF4KSS, inspects the solar cell panel mounting before testing begins.

Photo: D. Jordan, AA4KN

Bob Davis, KF4KSS, checks mounting brackets that attach ARISSat-1 to the expansion plate.

Photo: D. Jordan, AA4KN and ARRL

Mounting ARISSat-1 for testing in the Z axis

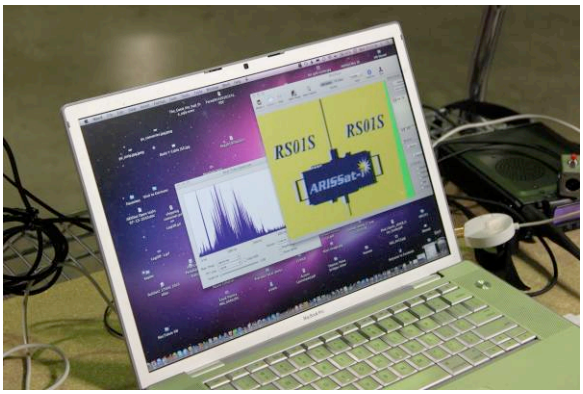

Photo: D. Jordan, AA4KN

Monitoring ARISSat-1 telemetry and SSTV signals during vibration test. The satellite's telemetry signal spectrum can be seen on the left side of the screen.

CLOSING NOTES : From this list, it's obvious to conclude that a lot of work and time went into developing ARISSat-1 in Orlando.

Partial Task List for ARISSat-1 development in Orlando

- Fabricate the top and bottom plates of the spacecraft
- Fabricate the mechanical components
- Fabricate the corners pieces
- Arrange for all plating and machining of parts for the satellite
- Fabricate the solar panel mounting plates
- Fabricate the control panel plates
- Fabricate the solar panel cables and install the solar panel wiring
- Fabricate and assemble two experiment mockups
- Fabricate mounting feet for the satellite for use during testing
- Install and test all cables inside the spacecraft
- Design and fabricate a battery mockup to scale.
- Apply Vibra-Tite solution to screws and cure
- Insert helicoils to screw holes
- Integrate cameras into housings and test
- Attach custom handles to space frame
- Attach Velcro to perimeter of solar panels and covers
- Design, fabricate and assemble Rx and Tx antennas
- Operate and test the system for months while waiting for shipment
- Create training videos for ISS crew
- Secure, edit and process voice greeting messages from submitted sound files
- Secure, edit and process images submitted for ARISSat-1 Fly a File project
- Secure a website online to host files submitted for Fly a File project
- Attend weekly ARISSat-1 team telecom meetings
- Search for local sources for dry ice
- Assemble and configure Thermal vacuum Test System
- Travel to Russia to explain to the Russian partners how to prepare and launch the satellite.

… and the list goes on.

The ARISSat-1 project is unique in that it not only provided an operational amateur radio transponder and beacons, but in addition, serves as an educational platform for teachers to use to help engage their students in STEM (science, technology, engineering and math) initiatives and this in turn inspires students to pursue careers in the scientific field and possibly become future amateur radio operators.
There is another side to this story. Volunteering to help support a project like ARISSat-1 or any amateur satellite cannot help but broaden the interest and knowledge of those willing to give up their time and energy toward such a creative effort.
There are many aspects to the development of an amateur radio satellite and everyone has something special and unique that they can offer. In order to take part in a project like this, contact AMSAT and **volunteer**.

Go to www.amsat.org.

Send an Email to: martha@amsat.org

Or Call 888-322-6728

Decoding Satellite Telemetry from ARISSat-1

Douglas D. Quagliana, KA2UPW/5
dquagliana@aol.com

Abstract

This paper discusses the ARISSat-1 telemetry format, the methods for decoding the telemetry from ARISSat-1, the ARISSatTLM telemetry decoding program, the ARISSat-1 telemetry web pages, the Internet telemetry server and offers some lessons learned.

Introduction

On the third of August, the satellite ARISSat-1 was deployed from the International Space Station and began operations. Shortly thereafter, radio transmissions from the spacecraft were received by amateur radio operators and were reported on amsat-bb. Amateurs running the ARISSatTLM program were able to receive and decode CW and BPSK telemetry from the spacecraft and forward the BPSK telemetry over the Internet to a telemetry server. About once a minute, as long as at least one ground station anywhere in the world is forwarding telemetry frames, the telemetry server decodes the latest telemetry and updates the ARISSatTLM web pages. This is expected to continue until the satellite electronics fail or until the satellite reenters sometime in 2012.

The Telemetry Decoding Process: the equations, data structures and tables

ARISSat-1, also known as KEDR or RadioSkaf-B, was transmitting telemetry almost continuously until the battery failed. At present the satellite transmits telemetry only when it is illuminated by sunlight. However, there is a delay between the time when it emerges from eclipse and the time when the transmissions begin. The satellite currently switches between high and low power modes. In high power, mode the telemetry is transmitted constantly. In low power mode, the telemetry is transmitted for about thirty seconds; afterwards, the satellite is silent for about two minutes.

When telemetry frames are being transmitted, the frames alternate between spacecraft telemetry frames and KURSK experiment frames. The first byte of the spacecraft telemetry frames is the ASCII letter “T” whereas the first byte of the KURSK experiment frames is “E”.

Rewrite less, Recompile more

Unlike many previous amateur radio satellites, the telemetry frame format for ARISSatTLM is based on a data structure from the C programming language. Reception of the telemetry frame can be thought of as a memory copy (memcpy) from the spacecraft’s memory to the ground station computer’s memory. An underlying assumption is that both systems are using the exact same version of the same C data structure from the same C header file in order to interpret the bytes of the telemetry frame the same way. Once the bytes are placed into the local computer’s data structure, the telemetry program can use the fields of the data structure to “know” how to manipulate the telemetry values and decode the telemetry. The programmer only needs to know the name of the data field and might not know the absolute byte position in the data structure or the actual size of that particular field, which the C compiler will handle.

This scheme has advantages and disadvantages. Source code can be written that will decode the telemetry independent of the absolute byte position of the data in the telemetry frame (with the restriction that the correct C header file is used when compiling the source code). If the telemetry data structure changes, such as when adding a new field in the middle, then none of the existing code has to be rewritten. It only needs to be recompiled. However, care must be taken to ensure that the telemetry program is recompiled with the exact same version of the newly revised C header file.

Most of the telemetry decoding in ARISSatTLM is done within the DisplayTelemetryAsText() function (See Appendix A.). The received telemetry bytes are copied into a variable named "T", which is a local variable of type ss_telem_t. The mission elapsed time (MET) in seconds is then available to the programmer as T.mission_time.

This is easily reformatted into days, hours, minutes and seconds. Decoding other telemetry values is not as straight forward and depends on the programmer having and using the C code from the "common" and "scale" directories from the ARISSat-1 SVN repository. Correct decoding also depends on behavior of the gcc C compiler. Some of the executable code on the satellite uses the same "common" and "scale" files, including the same declarations, which makes their use a requirement for any ground station code that wants to process the raw binary telemetry from the satellite. The author determined very early in the project that the path of least resistance (and greatest success) would be to use the already available C code and header files from the SVN along with a compatible version of gcc. [9]

As an example, the current satellite mode is stored in T.mission_mode. This byte should be one of three values for low power, high power or emergency mode. The exact binary values for these modes are assigned by the gcc compiler because the ss_mission_modes_t is declared as an "enum" within ss_types_common.h. The values that gcc assigned are the actual values transmitted in the telemetry. Hypothetically, it is possible that some other C compiler besides gcc might assign different binary values based on the same enum declaration. When compiled with this other C compiler, the same ARISSatTLM source code would still run, but it would result in an executable which will behave differently when decoding the received values in the satellite telemetry, which are based on the enum values assigned by gcc. Similarly, if the hypothetical C compiler were to rearrange the order of the variables in the ss_telem_t struct or remove any unused variables in the ss_telem_t struct during code optimization, then the results would be unpredictable.

The raw values for the battery voltages and currents are located in T.power.batt_status.v_raw and i_raw respectfully. In order to decode these telemetry values, one has to use the supplied functions scale_psu_v_batt() and scale_psu_i_batt() from the scale_psu.c file. The low level details are hidden from the programmer, who only needs to call the appropriate scaling function and get the decoded return value.

The statuses of various devices such as the cameras are transmitted in the telemetry. An "ON" status has the value three. Any other value is considered to be "OFF". However this status is only valid at the moment when the satellite polls that device. The cameras are technically only "ON" while actually taking their pictures, which only takes a moment or two. They usually appear in the telemetry as "OFF".

Each solar panel has its own power point tracker (PPT). However, the PPT for a solar panel will only be running if its solar panel is illuminated. When the satellite emerges from eclipse, it is possible for one of the panels to be facing towards deep space. In that happens and if the satellite reset during the eclipse, then the telemetry from this PPT will appear as zeros until the panel becomes illuminated again. If the PPT is responding when it is polled, then the age (T.ppt_status[].aged) in the telemetry will be zero.

Some telemetry values, such as the temperate, cannot be decoded using an equation. They are intended to be decoded by looking up the raw telemetry value in a table of values and reading the decoded value out of the same table. The table is implemented as a C array. For example, the scale_thermistor_C() function converts a raw temperature value to a decoded value. The raw telemetry value is the position in the temperatureTable[] array that contains the decoded value. Thus, `temperatureTable[ raw_telemetry_value ]` will return the decoded temperature value from the array. The complete table is in the scale_therm.c file on the SVN.

Statistics from the Internet Telemetry Server

As of October 1, the telemetry server has received over 134,800 telemetry frames, which includes both spacecraft telemetry and KURSK telemetry. Of these, over 71,300 are spacecraft telemetry, and over 63,400 are KURSK telemetry frames. These are the total frames that were received; this includes duplicate frames when two or more ground stations were both in the satellite footprint at the same time, and all of those ground stations were forwarding telemetry to the telemetry server. The total frames with duplicates, rather than the total number of unique frames received, is a good measurement of the level of interest in the satellite and its telemetry.

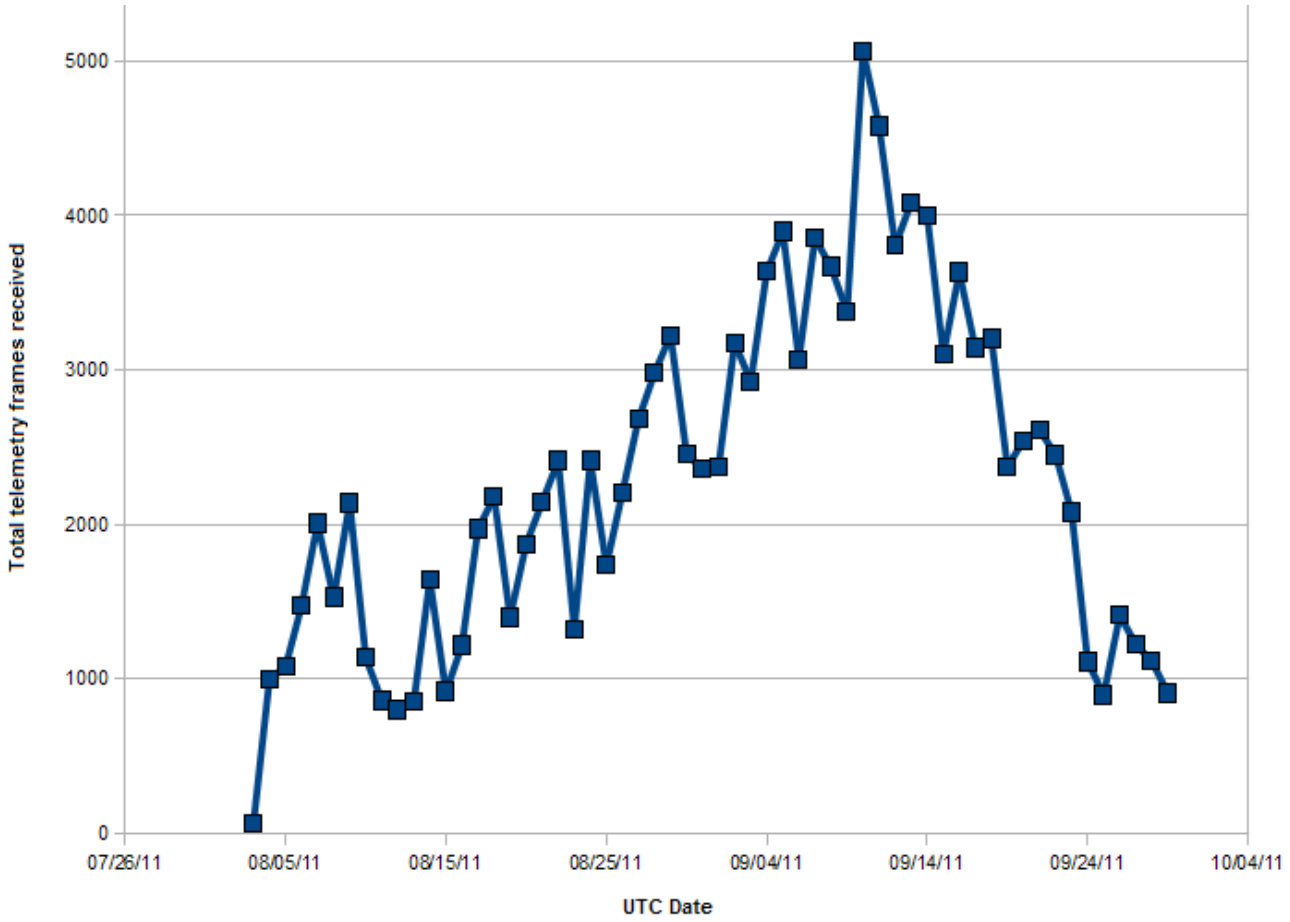

Total telemetry frames (spacecraft and KURSK experiment telemetry, including duplicate frames) received by the Internet Telemetry Server per UTC day from 2011-08-03 to 2011-09-29

Source: KA2UPW/5

ARISSat-1 was deployed late in the day on August third (UTC time), which resulted in a lower count of telemetry frames received on the first day. The server received the most frames (over 5,000) on Saturday September 10 (UTC) and the highest number of ground stations (75) on August 28. Since these dates, telemetry totals have slowly declined. This is partially due to a decrease in the total number of ground stations that are reporting telemetry and also due to the gradual shifting of the orbit of ARISSat-1 relative to the Earth's terminator, which led to passes over several of the more prolific ground stations while ARISSat-1 was in eclipse. Since the battery failure, it appears that ARISSat-1 is not transmitting any telemetry frames during eclipses and for a short period of time after emerging from eclipse. Domain name service (DNS) problems on Sept 24 and Sept 25 (UTC) caused telemetry numbers to be lower than expected. A fix has been implemented on the Internet telemetry server to prevent the DNS problem from happening again.

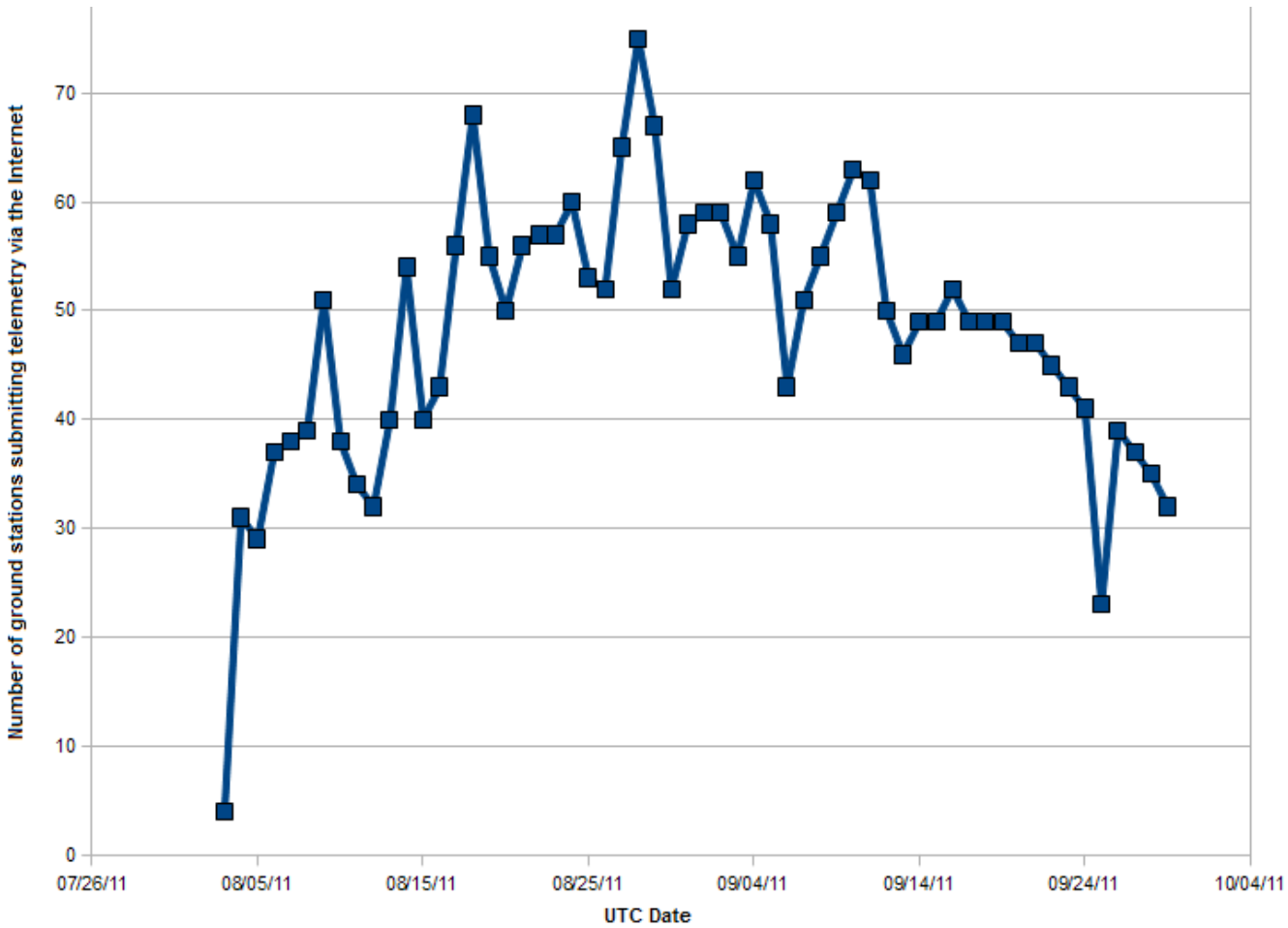

Number of ground stations that were submitting ARISSat-1 telemetry to the Internet Telemetry Server per UTC day from 2011-08-03 to 2011-09-29.

Source: KA2UPW/5

As of September 29, there were over 263 different ground stations that have sent in at least one telemetry frame. When ignoring callsigns like "NOCALL" and country only callsigns such as "LU", "PP5", "VK2", and when removing callsigns that have "-1" or "-2" after the callsign (these are callsigns from the same person sending in telemetry from more than one computer/radio/station) and when removing callsigns which are clearly typos of correct callsigns (for example, removing “KA@UPW” because “KA2UPW” also appears and because "@" is not a valid character in a callsign), the total number of unique ground stations would be 250.

Telemetry was received from a number of different countries around the world. The country of origin was determined by the amateur radio callsign's ITU prefix using the table available at http://life.itu.int/radioclub/rr/ap42.htm.

Ground Stations Reporting Telemetry (Per Country) as of 9-29-2011

Argentina	3	Israel	1	Spain	2
Australia	18	Italy	11	Sweden	2
Belgium	4	Japan	19	Switzerland	3
Brazil	3	Malaysia	1	Thailand	7
Canada	5	Malta	1	Turkey	1
Croatia	1	Netherlands	3	Ukraine	1
Czech Republic	3	New Zealand	3	United Kingdom	10
Denmark	2	Norway	2	United States	87
England / UK	19	Poland	2	Unknown	3
Finland	1	Portugal	2	Vietnam	1
France	10	Russia	3	Wales / UK	1
Germany	14	Scotland / UK	2		
Greece	2	Serbia	1		
Guernsey / UK	1	Slovak Republic	1		
Ireland	2	South Africa	1	Total Countries	41

Total Telemetry Frames (By Country) as of 9-29-2011

Argentina	786	Ireland	62	Slovak Republic	464
Australia	5989	Israel	49	South Africa	310
Belgium	2505	Italy	813	Spain	377
Brazil	2485	Japan	25823	Sweden	3507
Canada	5966	Malaysia	253	Switzerland	721
Croatia	7	Malta	743	Thailand	4458
Czech Republic	603	Netherlands	3126	Turkey	43
Denmark	39	New Zealand	4863	Ukraine	11
England / UK	7467	Norway	365	United Kingdom	541
Finland	25	Poland	45	United States	45524
France	2411	Portugal	352	Unknown	645
Germany	8144	Russia	2410	Vietnam	57
Greece	1144	Scotland / UK	112	Wales / UK	197
Guernsey / UK	115	Serbia	31		

KURSK telemetry statistics by experiment block as of 9-30-2011

```
12344 E1B1
12547 E1B2
12277 E1B3
11433 E1B4
14878 E1B5
```

The E1B5 KURSK telemetry frame is significantly shorter than the other four frames. This might account for the higher reception count. The spacecraft continues to transmit KURSK telemetry frames even after the battery failure; however, at present, the validity of the KURSK experiment data after the battery failure is not known to the author.[4]

Lessons Learned

There will be problems. While it appears to be possible to exchange the current set of problems for a completely different set of problems, it does not seem to be possible to ever reduce the total number of problems to zero. Moreover, while there is a non-zero lower limit to the number of problems, there does not seem to be any upper limit on the number of problems.

One of the ongoing challenges while developing the ground station software was keeping up to date with the onboard satellite software. As the software was developed for ARISSat-1, the contents of the telemetry frame would necessarily change as new telemetry fields were added. The new format also made obsolete all of the previous recordings of the telemetry signal, which contained the older format. More often than not, the new telemetry frame format was incompatible with the old telemetry format, particularly if the new bytes were added to the middle of the telemetry frame. If nothing else, the number of bytes in the actual telemetry frame was not the number of bytes that the software expected, and there was not anything in the telemetry frame to indicate a version or revision. Usually the older ground station software did not work correctly with the newer satellite software. Because of the geographically separated nature of the development team, different satellite developers would sometimes be running different versions of the satellite software and different versions of the ground station software all at the same time.

One way to prevent this for future missions would be to either (somehow) force later telemetry formats to be backwards compatible or to include a byte in the telemetry frame indicating a revision (for example, a telemetry “A” frame). Once defined, the “A” revision of the telemetry frame would be frozen and never changed. If it is later determined that additional telemetry values need to be sent or if the telemetry format itself must be changed, then define a new telemetry frame (the "B" telemetry frame) and transmit the “B” frame instead of or in addition to the “A” telemetry frame. Nothing says that the “B” frame has to be the same size as the “A” frame. This scheme has the advantage that the ground station telemetry programs would continue to work properly, at least for any “A” telemetry frames that they receive. The ground station telemetry programs could be written to recognize the revisions of the telemetry frame that they are able to decode and then ignore any unexpected revisions that they receive (perhaps logging the unexpected frame in the log files). Long time telemetry collectors will recognize this scheme as similar to telemetry format sent by the satellites AO-10, AO-13 and AO-40.

Placing different telemetry values in different telemetry frames would also allow the spacecraft to transmit different telemetry values at different rates. Rapidly changing values could be sent more often in one type of telemetry frame, and slowly changing values could be transmitted less frequently in a different type of telemetry frame. [6] Had this been adopted on ARISSat-1, it might have been possible to determine the spin rate [7] from the solar panel voltages. However, the spacecraft telemetry frames transmitted by ARISSat-1 are transmitted alternately with the KURSK experiment telemetry frames. In addition, all of the spacecraft telemetry is sent together in one large telemetry frame. Due to the size of the resulting telemetry frames and the bit rate of the telemetry stream, the telemetry from the solar panels is probably not being sent quickly enough to determine the spin characteristics.

ARISSatTLM writes a detailed log file called ARISSATTLM.LOG. Each line in the log file has a time stamp and an individual message. In addition, when the software receives a telemetry frame, it always writes the contents of that frame as ASCII bytes to a comma delimited value (CSV) file with a name based on the current date. Neither file is ever rewritten. New entries are always appended at the end of the file so that no data is lost. Both log files were extremely useful during development and debugging in order to determine the values of the telemetry bytes that were received and which execution path the ARISSatTLM software actually took (as opposed to the execution path that the programmer really would have preferred.) The CSV files also serve as a backup method of telemetry collection in the event that anything happens to the Internet telemetry server or in the event of networking problems that prevent the server from receiving the telemetry. At this time, ground stations are still encouraged to email all of their CSV files to telemetry@arissattlm.org even if they are forwarding telemetry over the Internet to the server.

Users will do all sorts of things that were not expected and which were not tested. Some examples of unexpected behavior include mistyping their own callsign, typing in a partial callsign, and deleting the default callsign of "NOCALL" but leaving the callsign field completely blank. A few other behaviors probably should have been found during testing, but were not caught until after the program was released: users typing in their callsign in upper case one on one computer but in lower case on a different computer, and users clicking on the "X" in the upper right corner of the window in order to terminate ARISSatTLM rather than selecting File and Exit from the menu.

During development, it is easy to dismiss certain problems with comments such as “We’ll cross that bridge when we get there.” However, someone needs to determine how to efficiently handle hundreds of email messages containing questions about the software (ARISSatTLM), questions about ARISSat-1, spam, telemetry

reports, telemetry contained within attachments, telemetry sent as text pasted into the email, more questions, more spam, attachments from users showing what their stations actually look like, text and telemetry randomly pasted into the middle of the body of the email, email messages describing networking problems that do not make any sense at all, and, of course, even more questions. A publicly announced email address attracts spam. For example, during a previous telemetry project a few years ago, the author received more spam than telemetry, so create and use a special email address, not a personal email address, for telemetry collection. Also, create telemetry files on the user's machine that will be unique to the user. ARISSatTLM always creates the telemetry based on the date. This results in multiple files being submitted which all have the same name. For ARISSatTLM, the address telemetry@arissattlm.org was used, and a number of small bash scripts were written to perform email handling tasks, file processing, and file renaming.

Plan ahead before operations begin and determine how to shut down (or reboot) the telemetry server for unscheduled hardware maintenance, urgent security patches, and so on without losing any of the incoming telemetry. Is there another backup system available at the same site that can be swapped into service on little or no notice, or is there another system offsite (far away) that can be swapped into service on little or no notice? Perhaps the server can be rebooted quickly while the satellite is out of range of all of the known ground stations during an orbit that takes it over an uninhabited part of the Pacific Ocean? Perhaps not. [8]

For ARISSatTLM, the server software was written to be generic enough that it could be easily installed on any other Windows computer within a few minutes. The local network router was reconfigured to forward the incoming telemetry packets to multiple computers on the local area network. One easy way to do this on certain network routers is to forward the TCPIP port for the incoming telemetry packets to the private IP address ending in .255 (for example, 192.168.1.255). This causes the incoming packet to be broadcast to all of the computers on the local area network, and this works well for redundancy and switchover between servers.

The Internet telemetry server's software is also divided into two separate programs. The first program only receives the incoming STP packets [5] and writes them to the hard drive. This program was kept as simple as possible and has not encountered any problems at all. A second program periodically checks for the telemetry files written by the first program, decodes the telemetry, creates an HTML page containing the latest telemetry, and uploads the new HTML pages to the web server. The second program is more complicated and occasionally has problems such as when the network connection to the web server hangs during an update for any of several reasons. However, since all of the telemetry has already been saved to the hard drive, the second program can be terminated and restarted (if needed) without any loss of telemetry.

Develop a plan for external network outages that can only be resolved by the Internet service provider. Obtain the telephone number for their support department as well as your account number and your PIN. Be ready to explain all of the troubleshooting steps that have already been taken locally and take good notes during the phone call. Be sure to get the provider's ticket number for the incident.

Always have a "Plan B." Be ready for the unexpected natural or manmade disaster even if it happens across the country. During a large scale power blackout in the San Diego area, the AMSAT server could not be reached via the Internet, and the telemetry archives could not be updated. (The telemetry archives were updated a few hours later without incident.) While there was no impact to the ARISSatTLM project, it is interesting to note that during the first few months after its deployment, the East Coast was hit by both an unusual hurricane, depriving some areas of power for days, and an extremely unusual earthquake.

When writing the client software, use an application framework with a component library API. Do not try to program down to the bare operating system components (Win32 in this case). Some of ARISSatTLM is written at the Win32 layer. This caused extra work, cost additional time and created increased unnecessary complexity.

Because it was anticipated that the Internet telemetry server might need to be run on different machines (with different IP addresses), the ARISSatTLM software intentionally does not cache the IP address. It looks up the IP address before sending each telemetry frame to the server. This was advantageous when the server's IP address changed unexpected due to a domain name service problem. If the ARISSatTLM software had looked up the IP address once and cached it, then each ground station would have needed to quit and restart the software in order to get the new IP address. A number of ground stations are running semi-automated, so it could have taken days to get all of the ground stations to convert to the new IP address.

Make things simple, but not as simple as possible. The code for joining the five KURSK files should have included the C code which looked like

```
while ((c = fgetc(hKurskPartNum))!= EOF) ...
```

but this was “simplified” at some point into two separate statements and rewritten using the coding style where conditional tests are always written with the constant on the left of the comparison to avoid accidental assignment of the constant to the value being compared. For example, the programmer would write `if (CONST == x)` rather than `if (x == CONST)`. This prevents an accidental assignment if the programmer mistypes a single equal sign when two were intended. The final production code was written as

```
c = fgetc( hKurskPartNum );
while (EOF != c) {
      ...
      c = fgetc( hKurskPartNum );
      ...
}
```

However, because of the way that fgetc() returns EOF, the above code fails when it processes a binary file which contains the value 0xFF. The above bug was not caught before release because (at least during the testing period) the KURSK experiment simulator never sent a byte with the value 0xFF in the middle of a simulated KURSK frame. To find these types of problems, testing should be done for prolonged periods with real live data whenever possible. Because the telemetry was saved to the CSV files and forwarded over the Internet, none of the KURSK telemetry was lost because of this bug.

Audio recordings of the telemetry signal are great for reproducing problems, but they are not enough. More than once a problem was known to exist, and the problem would sometimes happen when the telemetry signal was being received from the test satellite in the lab, but the problem could not be reproduced using any of the available recordings. Extended testing using the telemetry audio signal, streamed over the Internet, provided an opportunity to find and fix several bugs that had not been discovered until that time and then quickly test the fixes. Group testing using the same audio stream at the same time helped to isolate the root cause of problems as either a bug in code or something specific at a particular testing location.

Having two different people (Douglas and Gilbert) write two different telemetry programs for two different operating systems helped to find and quickly fix software bugs. (Two different programmers will seldom both write the same bug, and if the code does have the bug, then one can borrow and modify the working code from the other person).

ARISSat-1 was built without a real time clock. Each of the transmitted telemetry frames includes the mission elapsed time. However, once the battery failed, the satellite started to reset on every orbit. This also resets the mission elapsed time on every orbit. Therefore, when a telemetry frame arrives at the Internet telemetry server, there’s no easy way for the server to tell the difference between "live" telemetry and telemetry that someone is sending into the server because they are post-processing a recording from an earlier orbit. It should be possible to examine a group of multiple telemetry frames and collectively compute the time of last reset by subtracting their mission elapsed times from the times when they were received at the Internet telemetry server. They should all agree within a few seconds. However, the UTC time reported in the STP telemetry frame is dependent on the time on the ground station user’s computer. While the computer’s time is expected to be accurate, especially on computers being used by amateurs who are tracking satellites, this is not always the case. (Determining the standard deviation of the clock time offsets on the computers submitting ARISSat-1 telemetry is left as an exercise to the reader.)

Test the software on a version of the operating system that is configured for a language that is different than the language used on the computers used to develop the software. For ARISSatTLM, all of the computers were configured to use English. However, after it deployed, the software was used on computers configured for other languages. On those computers, some of the expected directory names and pathnames were different, and when the operating system was queried for the date and time, the results returned were sometimes not what was

expected (for example, on one non-English computer the expected result was “Thu, 04 Aug 2011” and the actual string returned was “tor, 04 aug. 2011”).

There are quite a few people with more than one soundcard in their computer. This was unexpected.

Next time

There are few things that could be done differently next time. It would be helpful to have some sort of advanced registration for ground stations, partially to authenticate that the ground station sending in the telemetry really is whom they say they are. Also, more than one person could legitimately leave the callsign field as NOCALL. Currently it is difficult, but not impossible, to determine how many different people have done this. There should be separate non-callsign designators for unlicensed ground stations that want to contribute.

In the case of the ARISSatTLM Internet telemetry server, the server software can be easily installed or moved to another server, but if the server side was more complicated or if the setup and configuration for the server were more complex, then it might be beneficial to run the server inside a virtual machine or “in the cloud.”

A waterfall tuning indicator would have been helpful for ground stations that tune the telemetry signal by hand. The automated ground stations seem to be receiving telemetry fine. Readers who configured such an automated ground station are encouraged to contact the author with the details of their exact station configuration, including hardware and software used, the radio receiver, antenna gain, coax losses, and noise figure measurements (if known). An implementation of a telemetry decoding program using a wideband I-Q receiver with an all software solution to Doppler tuning of the telemetry signal is also on the wish list for “next time.”

Additional Information

The ARISSatTLM webpage is located at http://www.arissattlm.org. This website has links to the latest ARISSatTLM software for Windows and Mac computers. This page also contains a link to a separate website containing the slow scan television pictures from ARISSat-1. The most current telemetry can be viewed on a cell phone or other mobile computing device by visiting http://www.arissattlm.org/mobile. A more complete decoding of the same telemetry is also available at http://www.arissattlm.org/live. These are both updated about once a minute whenever any ground station is forwarding telemetry to the Internet telemetry server. Archived telemetry is available from AMSAT at http://www.amsat.org/amsat/ftp/telemetry/arissat. The archived telemetry is usually updated several times a week. Additional news and information about ARISSat-1 is available at http://www.arissat1.org.

Thanks!

If anything has been achieved, it is because of the efforts of the whole team working together. Special thanks are given to the following people for their contributions:

- Phil Karn, KA9Q, for his BPSK1000 code [2]
- Tony Monteiro, AA2TX, for the sound card software routines used in ARISSatTLM
- Gilbert Mackall, N3RZN, for assistance and collaboration with ARISSatTLM, and especially for writing the telemetry decoding software that outputs the decoded telemetry as HTML code. His software became part of the Internet telemetry server software and is used every time one of the web pages is updated.
- Gould Smith, WA4SXM, and Lou McFadin, W5DID, for testing version after version of the ARISSatTLM software and reporting plenty of bugs.
- Mark Hammond, N8MH, for extended testing and late night ARISSatTLM debugging sessions.
- Joe Armbruster for the telemetry audio stream used during testing
- My on-call editor, now sleep deprived, for her proofreading at 2 AM

References

[1] "ARISSatTLM - A Software Demodulator and Telemetry Display Program for the ARISSat-1 Satellite". Proceedings of the AMSATNA 28th Space Symposium. 2010.

[2] Karn, Phil. "The BPSK1000 Telemetry Modem for ARISSat-1." Proceedings of the AMSATNA 28th Space Symposium. 2010.

[3] [deleted]

[4] The format of the Kursk experiment data frame is documented on the SVN at <https://svn.sarpeidon.net/viewvc/suitsat2/Experiments/Kursk%20011509/Suitsat%202/Structure%20of%20experiment%20data%20frame%2B.pdf>

[5] Karn, Phil. "The Satellite Telemetry Protocol (STP)". 8/1/2010. <https://svn.sarpeidon.net/suitsat2/repos/ground_station_software/ARISSatTLM/Documentation/telem.txt>

[6] The sending of different telemetry values at different rates was originally suggested by Phil Karn. However, it wasn't implemented on ARISSat-1.

[7] Since ARISSat-1 is not magnetically stabilized the spacecraft's rotations should probably be called the "tumble rate" rather than the "spin rate." The author would be interested in hearing from any readers who make any calculations regarding the rotation of the spacecraft.

[8] Hofstadter's Law: It always takes longer than you expect, even when you take into account Hofstadter's Law. — Douglas Hofstadter, Gödel, Escher, Bach: An Eternal Golden Braid. 20th anniversary ed., 1999, p. 152. ISBN 0-465-02656-7.

[9] gcc 4.2.4, although not the current version distributed in Cygwin, was found to give excellent results. If the 4.2.4 executable is not readily available, then it can be built from its C source code using a different version of the gcc compiler.

The author encourages constructive criticisms and particularly welcomes deconstructive comments and witty puns.

The ARISSatTLM “live” telemetry page

ARISSat-1 Telemetry - Full Decode

This telemetry was received on Sun, 02 Oct 2011 14:58:00 UTC

Uptime:1112 seconds - 00d:00h:18m:32s - Mode: HIGH PWR

Battery

Batt Voltage	35.628
Batt Current	-0.016
PSU Vdd	5.054
5V VDD	5.054
Charging A.h	0.001
Discharging A.h	0.002
Net A.h	-0.001

Battery is Discharging

Power Consumption

Camera	0.000	153535
Experiment	0.000	609977
IHU	0.207	10637945
SDX	0.240	13442377
5 Volt	0.476	25578133
RF (8V)	0.466	11049407

Status

IHU	ACTIVE	Camera1	OFF	Experiment	OFF
PSU	ACTIVE	Camera2	OFF	5 Volt	ACTIVE
SDX	ACTIVE	Camera3	OFF	8 Volt	ACTIVE
		Camera4	OFF		

Temp

IHU PCB	40°C	Top Camera	15°C
PSU	38°C	Bottom Camera	30°C
RF	42°C	Control Panel	16°C
Batt	22°C	Experiment	17°C
RF Enc	23°C		

+X PPT-0

Energy	7828483
Solar temp	19°C
Diode temp	34°C
Ind_temp	38°C
sp_current_adc_raw	0.000A
sp_voltage_raw	14.421V
osc_ccp_current_setpt	0.032V
aged	Current
corrupt	0

-X PPT-1

Energy	6083963
Solar temp	12°C
Diode temp	34°C
Ind_temp	37°C
sp_current_adc_raw	0.188A
sp_voltage_raw	46.095V
osc_ccp_current_setpt	0.059V
aged	Current
corrupt	0

+Z PPT-2

Energy	6255466
Solar temp	68°C
Diode temp	33°C
Ind_temp	36°C
sp_current_adc_raw	0.141A
sp_voltage_raw	41.975V
osc_ccp_current_setpt	0.032V
aged	Current
corrupt	0

-Y PPT-3

Energy	4596682
Solar temp	11°C
Diode temp	33°C
Ind_temp	36°C
sp_current_adc_raw	0.004A
sp_voltage_raw	26.267V
osc_ccp_current_setpt	0.059V
aged	Current
corrupt	0

+Y PPT-4

Energy	4706089
Solar temp	18°C
Diode temp	32°C
Ind_temp	35°C
sp_current_adc_raw	0.000A
sp_voltage_raw	14.421V
osc_ccp_current_setpt	0.032V
aged	Current
corrupt	1

-Z PPT-5

Energy	779082
Solar temp	-7°C
Diode temp	32°C
Ind_temp	35°C
sp_current_adc_raw	0.000A
sp_voltage_raw	22.146V
osc_ccp_current_setpt	0.032V
aged	Current
corrupt	0

ARISSatTLM website by
Douglas Quagliana, KA2UPW/5
Gilbert Mackall, N3RZN
Version 0.03

Appendix A – DisplayTelemetryAsText()

```
#define SECONDS_PER_MINUTE 60
#define MINUTES_PER_HOUR   60
#define HOURS_PER_DAY      24
#define SECONDS_PER_HOUR   ( SECONDS_PER_MINUTE * MINUTES_PER_HOUR )
#define SECONDS_PER_DAY    ( SECONDS_PER_MINUTE * MINUTES_PER_HOUR * HOURS_PER_DAY )

int DisplayTelemetryAsText()
{
    ss_telem_t T;
    int PPTx;
    static ss_telem_t prevT;

    int intMETDays, intMETHours, intMETMinutes, intMETSeconds, intMETRemainder;

    if ( bufIn[ 0 ] != 'T' ) return;  // not a telemetry packet? Return.

    intGoodTelemetryFrames++;
    SetTelemetryIntegerValue( htlmGoodTelemetryFrames, intGoodTelemetryFrames );

    // zero out telemetry struct
    memset( &T, 0, sizeof( T ));

    // move telemetry frame into local struct so that we can access the
    // telemetry by field names.
    // the "27" skips past the "T", frame counter, and "Hi, This is ARISSat-1."
    memcpy( &T, &bufIn[ 27 ], sizeof( T ) );

    // We got a telemetry frame!
    sprintf( strLogIt, "Received telemetry frame with MET=%d Len=%d", T.mission_time,
               intBytesComingThroughPipe );
    LogIt();

    // MET group
    SetTelemetryIntegerValue( htlmMETMET, T.mission_time );

    // There's probably a better way to do this...
    intMETRemainder = T.mission_time;
    intMETDays      = intMETRemainder / SECONDS_PER_DAY;
    intMETRemainder = intMETRemainder - ( intMETDays * SECONDS_PER_DAY );
    intMETHours     = intMETRemainder / SECONDS_PER_HOUR;
    intMETRemainder = intMETRemainder - ( intMETHours * SECONDS_PER_HOUR );
    intMETMinutes   = intMETRemainder / SECONDS_PER_MINUTE;
    intMETRemainder = intMETRemainder - ( intMETMinutes * SECONDS_PER_MINUTE );
    intMETSeconds   = intMETRemainder;

    // Display MET values
    SetTelemetryIntegerValue( htlmMETDays,    intMETDays    );
    SetTelemetryIntegerValue( htlmMETHours,   intMETHours   );
    SetTelemetryIntegerValue( htlmMETMinutes, intMETMinutes );
    SetTelemetryIntegerValue( htlmMETSeconds, intMETSeconds );

    if ( EMERGENCY_PWR == T.mission_mode ) {
         SendMessage( htlmMETMissionMode, WM_SETTEXT, 0, (LPARAM) (LPCTSTR) "EMERGENCY" );
    } else if ( LOW_PWR == T.mission_mode ) {
         SendMessage( htlmMETMissionMode, WM_SETTEXT, 0, (LPARAM) (LPCTSTR) "LOW POWER" );
    } else if ( HIGH_PWR == T.mission_mode ) {
         SendMessage( htlmMETMissionMode, WM_SETTEXT, 0, (LPARAM) (LPCTSTR) "HIGH POWER" );
    } else  {
        SendMessage( htlmMETMissionMode, WM_SETTEXT, 0, (LPARAM) (LPCTSTR) "DONT-KNOW" );
        sprintf( strLogIt,
               "WARNING: At T.mission_time = %lu Days= %d Hours= %d Minutes= %d Seconds= %d",
               T.mission_time, intMETDays, intMETHours, intMETMinutes, intMETSeconds );
        LogIt();
        sprintf( strLogIt, "WARNING: T.mission_mode was an unknown value <%d>", T.mission_mode );
        LogIt();
    }

    // BATT group
    if ( TRUE == cbShowRawIsChecked()  ) {
```

```
   // Show RAW telemetry values
   SetTelemetryIntegerValue( htlmBATTBattVoltage,    T.power.batt_status.v_raw );
   SetTelemetryIntegerValue( htlmBATTBattCurrent,    T.power.batt_status.i_raw );
   SetTelemetryIntegerValue( htlmBATTPSUVdd,         T.power.batt_status.ref2p5_raw );
} else {
   // Show Cooked telemetry values
   SetTelemetryDoubleValue( htlmBATTBattVoltage,
           scale_psu_v_batt( T.power.batt_status.v_raw, T.power.batt_status.ref2p5_raw ));
   SetTelemetryDoubleValue( htlmBATTBattCurrent,
           scale_psu_i_batt( T.power.batt_status.i_raw, T.power.batt_status.ref2p5_raw ));
   SetTelemetryDoubleValue( htlmBATTPSUVdd,
           scale_psu_vdd(    T.power.batt_status.ref2p5_raw ));
}

// Always show the hex raw value for 2.5 V Ref
SetTelemetryHexValue(     htlmBATT2pt5VRef,       T.power.batt_status.ref2p5_raw );

// If the battery current is positive then the battery is charging, but if the battery current
// is negative then the battery is discharging.
if ( scale_psu_i_batt( T.power.batt_status.i_raw, T.power.batt_status.ref2p5_raw ) > 0 ) {
   SetTelemetryStringValue( htlmBATTBatteryIs, "Charging" );
} else {
   SetTelemetryStringValue( htlmBATTBatteryIs, "Discharging" );
}

SetTelemetryUnsignedLongLongValue( htlmBATTChargingCol,
   U48TOU64( T.power.batt_history.c_battery_chrg_raw    ) );
SetTelemetryUnsignedLongLongValue( htlmBATTChargingCol,
   U48TOU64( T.power.batt_history.c_battery_chrg_raw    ) );
SetTelemetryUnsignedLongLongValue( htlmBATTDischargingCol,
   U48TOU64( T.power.batt_history.c_battery_dischrg_raw ) );
SetTelemetrySignedLongLongValue  ( htlmBATTNetCol,
   S48TOS64( T.power.batt_status.c_battery_net_raw      ) );

// POWER CONSUMPTION group
if ( TRUE == cbShowRawIsChecked()  ) {
   // Show RAW telemetry values
   //adc_raw = XXXXX.i_raw_lsb + (( XXXXX.i_raw_msb & 0x0f) << 8 );
   SetTelemetryIntegerValue( htlmPOWERCameraInstant,
           T.power.camera.i_raw_lsb     + (( T.power.camera.i_raw_msb     & 0x0f) << 8 )  );
   SetTelemetryIntegerValue( htlmPOWERExperimentInstant,
           T.power.experiment.i_raw_lsb + (( T.power.experiment.i_raw_msb & 0x0f) << 8 )  );
   SetTelemetryIntegerValue( htlmPOWERIHUInstant,
           T.power.ihu.i_raw_lsb        + (( T.power.ihu.i_raw_msb        & 0x0f) << 8 )  );
   SetTelemetryIntegerValue( htlmPOWERSDXInstant,
           T.power.sdx.i_raw_lsb        + (( T.power.sdx.i_raw_msb        & 0x0f) << 8 )  );
   SetTelemetryIntegerValue( htlmPOWER5voltInstant,
           T.power.ps5v.i_raw_lsb       + (( T.power.ps5v.i_raw_msb       & 0x0f) << 8 )  );
   SetTelemetryIntegerValue( htlmPOWERRF8voltInstant,
           T.power.ps8v.i_raw_lsb       + (( T.power.ps8v.i_raw_msb       & 0x0f) << 8 )  );
} else {
   // Show Cooked telemetry values
   SetTelemetryDoubleValue( htlmPOWERCameraInstant,
           scale_psu_i_camera(     T.power.camera.i_raw_lsb     + (( T.power.camera.i_raw_msb
           & 0x0f) << 8 ), T.power.batt_status.ref2p5_raw));
   SetTelemetryDoubleValue( htlmPOWERExperimentInstant,
           scale_psu_i_experiment( T.power.experiment.i_raw_lsb + (( T.power.experiment.i_raw_msb
           & 0x0f) << 8 ), T.power.batt_status.ref2p5_raw));
   SetTelemetryDoubleValue( htlmPOWERIHUInstant,
           scale_psu_i_ihu(        T.power.ihu.i_raw_lsb        + (( T.power.ihu.i_raw_msb
           & 0x0f) << 8 ), T.power.batt_status.ref2p5_raw));
   SetTelemetryDoubleValue( htlmPOWERSDXInstant,
           scale_psu_i_sdx(        T.power.sdx.i_raw_lsb        + (( T.power.sdx.i_raw_msb
           & 0x0f) << 8 ), T.power.batt_status.ref2p5_raw));
   SetTelemetryDoubleValue( htlmPOWER5voltInstant,
           scale_psu_i_5v(         T.power.ps5v.i_raw_lsb       + (( T.power.ps5v.i_raw_msb
           & 0x0f) << 8 ), T.power.batt_status.ref2p5_raw));
   SetTelemetryDoubleValue( htlmPOWERRF8voltInstant,
           scale_psu_i_8v(         T.power.ps8v.i_raw_lsb       + (( T.power.ps8v.i_raw_msb
           & 0x0f) << 8 ), T.power.batt_status.ref2p5_raw));
}
```

```
// Total flight values for power consumption don't have raw / cooked values.  It's just the total.
SetTelemetryUnsignedLongLongValue( htlmPOWERCameraTotalFlight,
   U48TOU64( T.power.camera.c_total_raw     ));
SetTelemetryUnsignedLongLongValue( htlmPOWERExperimentTotalFlight,
   U48TOU64( T.power.experiment.c_total_raw ));
SetTelemetryUnsignedLongLongValue( htlmPOWERIHUTotalFlight,
   U48TOU64( T.power.ihu.c_total_raw        ));
SetTelemetryUnsignedLongLongValue( htlmPOWERSDXTotalFlight,
   U48TOU64( T.power.sdx.c_total_raw        ));
SetTelemetryUnsignedLongLongValue( htlmPOWER5voltTotalFlight,
   U48TOU64( T.power.ps5v.c_total_raw       ));
SetTelemetryUnsignedLongLongValue( htlmPOWERRF8voltTotalFlight,
   U48TOU64( T.power.ps8v.c_total_raw       ));

// STATUS group
if ( TRUE == cbShowRawIsChecked()  ) {
   // Show RAW telemetry values
   SetTelemetryIntegerValue( htlmSTATUSIHU,         T.power.ihu.status         );
   SetTelemetryIntegerValue( htlmSTATUSPSU,         T.power.ps5v.status + T.power.ps8v.status );
   //PSU "status" is 5v and 8v

   SetTelemetryIntegerValue( htlmSTATUSSDX,         T.power.sdx.status         );

   SetTelemetryIntegerValue( htlmSTATUSCamera1,     T.power.camera.status1     );
   SetTelemetryIntegerValue( htlmSTATUSCamera2,     T.power.camera.status2     );
   SetTelemetryIntegerValue( htlmSTATUSCamera3,     T.power.camera.status3     );
   SetTelemetryIntegerValue( htlmSTATUSCamera4,     T.power.camera.status4     );

   SetTelemetryIntegerValue( htlmSTATUSExperiment,  T.power.experiment.status  );
   SetTelemetryIntegerValue( htlmSTATUS5volt,       T.power.ps5v.status        );
   SetTelemetryIntegerValue( htlmSTATUS8volt,       T.power.ps8v.status        );

} else {
   // Show Cooked telemetry values
   if ( DEVICE_ACTIVE == T.power.ihu.status )
          { SetTelemetryStringValue( htlmSTATUSIHU, "ON" ); }
   else SetTelemetryStringValue( htlmSTATUSIHU,        "OFF" );
   // PSU is "ON" if we have both 5v and 8v
   if ( (DEVICE_ACTIVE == T.power.ps5v.status) && (DEVICE_ACTIVE == T.power.ps8v.status))
          { SetTelemetryStringValue( htlmSTATUSPSU,        "ON" ); }
   else SetTelemetryStringValue( htlmSTATUSPSU,        "OFF" );
   if ( DEVICE_ACTIVE == T.power.sdx.status )
          { SetTelemetryStringValue( htlmSTATUSSDX,        "ON" ); }
   else SetTelemetryStringValue( htlmSTATUSSDX,        "OFF" );
   if ( DEVICE_ACTIVE == T.power.camera.status1 )
          { SetTelemetryStringValue( htlmSTATUSCamera1,    "ON" ); }
   else SetTelemetryStringValue( htlmSTATUSCamera1,    "OFF" );
   if ( DEVICE_ACTIVE == T.power.camera.status2 )
          { SetTelemetryStringValue( htlmSTATUSCamera2,    "ON" ); }
   else SetTelemetryStringValue( htlmSTATUSCamera2,    "OFF" );
   if ( DEVICE_ACTIVE == T.power.camera.status3 )
          { SetTelemetryStringValue( htlmSTATUSCamera3,    "ON" ); }
   else SetTelemetryStringValue( htlmSTATUSCamera3,    "OFF" );
   if ( DEVICE_ACTIVE == T.power.camera.status4 )
          { SetTelemetryStringValue( htlmSTATUSCamera4,    "ON" ); }
   else SetTelemetryStringValue( htlmSTATUSCamera4,    "OFF" );
   if ( DEVICE_ACTIVE == T.power.experiment.status )
          { SetTelemetryStringValue( htlmSTATUSExperiment, "ON" ); }
   else SetTelemetryStringValue( htlmSTATUSExperiment, "OFF" );
  if ( DEVICE_ACTIVE == T.power.ps5v.status )
          { SetTelemetryStringValue( htlmSTATUS5volt,      "ON" ); }
   else SetTelemetryStringValue( htlmSTATUS5volt,      "OFF" );
   if ( DEVICE_ACTIVE == T.power.ps8v.status )
          { SetTelemetryStringValue( htlmSTATUS8volt,      "ON" ); }
   else SetTelemetryStringValue( htlmSTATUS8volt,      "OFF" );


// TEMP group
if ( TRUE == cbShowRawIsChecked()  ) {
```

```
      // Show RAW telemetry values
      SetTelemetryIntegerValue( htlmTEMPIHU,          T.ihu_temps.ihu_pcb );
      SetTelemetryIntegerValue( htlmTEMPPSU,          T.ihu_temps.psu_pcb );
      SetTelemetryIntegerValue( htlmTEMPRF,           T.ihu_temps.rf      );
      SetTelemetryIntegerValue( htlmTEMPBatt,         T.ihu_temps.battery );
      SetTelemetryIntegerValue( htlmTEMPTopCamera,    T.ihu_temps.top_cam );
      SetTelemetryIntegerValue( htlmTEMPBottomCamera, T.ihu_temps.bottom_cam );
      SetTelemetryIntegerValue( htlmTEMPControlPanel, T.ihu_temps.control_panel );
      SetTelemetryIntegerValue( htlmTEMPExperiment,   T.ihu_temps.experiment );
   } else {
      // Show Cooked telemetry values
      SetTelemetryIntegerValue( htlmTEMPIHU,          scale_thermistor_C( T.ihu_temps.ihu_pcb       ));
      SetTelemetryIntegerValue( htlmTEMPPSU,          scale_thermistor_C( T.ihu_temps.psu_pcb       ));
      SetTelemetryIntegerValue( htlmTEMPRF,           scale_thermistor_C( T.ihu_temps.rf            ));
      SetTelemetryIntegerValue( htlmTEMPBatt,         scale_thermistor_C( T.ihu_temps.battery       ));
      SetTelemetryIntegerValue( htlmTEMPTopCamera,    scale_thermistor_C( T.ihu_temps.top_cam       ));
      SetTelemetryIntegerValue( htlmTEMPBottomCamera, scale_thermistor_C( T.ihu_temps.bottom_cam    ));
      SetTelemetryIntegerValue( htlmTEMPControlPanel, scale_thermistor_C( T.ihu_temps.control_panel ));
      SetTelemetryIntegerValue( htlmTEMPExperiment,   scale_thermistor_C( T.ihu_temps.experiment    ));
   }


   for ( PPTx = 1; PPTx <= 6; PPTx++ ) {
      SetTelemetryUnsignedLongLongValue( htlmPPT[ PPTx ].PanelEnergy,
               U48TOU64(  T.ppt_status[ PPTx-1 ].sp_energy_osc_raw ));
      if ( TRUE == cbShowRawIsChecked() ) {
         SetTelemetryIntegerValue( htlmPPT[ PPTx ].Age, T.ppt_status[ PPTx-1 ].aged );
      } else {
         if ( 0 == T.ppt_status[ PPTx-1].aged ) {
            SetTelemetryStringValue( htlmPPT[ PPTx ].Age, "Current" );
         } else {
            SetTelemetryStringValue( htlmPPT[ PPTx ].Age, "Old" );
         }
      }
      SetTelemetryIntegerValue( htlmPPT[ PPTx ].CorruptCount, T.ppt_status[ PPTx-1 ].corrupt );
      //
      if ( TRUE == cbShowRawIsChecked()  ) {
         // Show RAW telemetry values
         SetTelemetryIntegerValue( htlmPPT[ PPTx ].PanelVoltage,
               T.ppt_status[ PPTx-1 ].sp_voltage_raw );
         SetTelemetryIntegerValue( htlmPPT[ PPTx ].PanelCurrent,
               T.ppt_status[ PPTx-1 ].sp_current_adc_raw );
         SetTelemetryIntegerValue( htlmPPT[ PPTx ].PanelTemp,
               (( T.ppt_status[ PPTx-1 ].sp_temp_raw_msb_diode_temp_raw_msb & 0xF0 ) << 4)
               + T.ppt_status[ PPTx-1 ].sp_temp_raw_lsb  );
         SetTelemetryIntegerValue( htlmPPT[ PPTx ].InductorTemp,
               (( T.ppt_status[ PPTx-1 ].ind_temp_raw_msb_fet_temp_raw_msb  & 0xF0 ) << 4)
               + T.ppt_status[ PPTx-1 ].ind_temp_raw_lsb );
         SetTelemetryIntegerValue( htlmPPT[ PPTx ].SetPoint,
               T.ppt_status[ PPTx-1 ].osc_ccp_current_setpt );
      } else {
         // Show Cooked telemetry values
         SetTelemetryDoubleValue( htlmPPT[ PPTx ].PanelVoltage,
               scale_ppt_sp_voltage( T.ppt_status[ PPTx-1 ].sp_voltage_raw ));
         SetTelemetryDoubleValue( htlmPPT[ PPTx ].PanelCurrent,
               scale_ppt_sp_current( T.ppt_status[ PPTx-1 ].sp_current_adc_raw ));
         SetTelemetryDoubleValue( htlmPPT[ PPTx ].PanelTemp,
               scale_thermistor_C((( T.ppt_status[ PPTx-1 ].sp_temp_raw_msb_diode_temp_raw_msb & 0xF0 )
      << 4)
               + T.ppt_status[ PPTx-1 ].sp_temp_raw_lsb  ));
         SetTelemetryDoubleValue( htlmPPT[ PPTx ].InductorTemp, scale_thermistor_C(
               (( T.ppt_status[ PPTx-1 ].ind_temp_raw_msb_fet_temp_raw_msb  & 0xF0 ) << 4)
               + T.ppt_status[ PPTx-1 ].ind_temp_raw_lsb ));
         SetTelemetryDoubleValue( htlmPPT[ PPTx ].SetPoint,
               scale_ppt_pwm_setpoint( T.ppt_status[ PPTx-1 ].osc_ccp_current_setpt ));
      }
   }
   // save this T for next time for up/down/equals indicators
   prevT = T;
}
```

ARISSat-1 Operational Survey
By Steven Bible, N7HPR

ARISSat-1, by our observation, has been an operational success—judging by the flood of contact reports on the AMSAT Bulletin Board, posting of hundreds of SSTV photos at the ARISS SSTV Gallery, and submission of over 100,000 frames of telemetry. The ARISSat-1 team had simple goals: make it easy to operate by allowing people to use existing amateur radios, scanners, and computers with sound cards.

It occurred to us that we should conduct an online survey to validate our choices of mission features. Canvassing the team, we came up with questions on what people's operating parameters (experience, equipment, etc.) were to help us learn how they are using ARISSat-1, and give us some feedback and ideas on what we can do for future amateur radio and educational-outreach satellites. The survey conducted on Survey Monkey at https://www.surveymonkey.com.

The survey began on September 22, 2011. Announcements were circulated through several online media. Below are the survey results from two week's worth of responses; unabashed, with no analyses or judgment. More than 600 people completed the survey. Many of the questions had respondents selecting multiple answers, thus the total percentages can add up to more than 100 percent. Responses are arranged in order from highest percentage to lowest.

1. How did you listen to ARISSat-1?

97% - Directly using my radios and antennas
5% - Indirectly from the Internet

2. Was ARISSat-1 enjoyable/exciting for you to operation/listen to?

88% - Yes
12% - No

3. What did you enjoy the most?

63% - Listening to greetings from space
51% - Capturing SSTV pictures
37% - Listening to voice telemetry
26% - Collecting the secret words
21% - Capturing telemetry from the BPSK beacon
13% - Listening to the CW beacons
10% - Viewing captured SSTV pictures on the Internet
11% - Communicating on the transponder
7% - Studying the captured telemetry from the archive
2% - Collecting call signs from the CW beacons

4. What operating mode did you enjoy the most?

59% - Voice
44% - SSTV
22% - Telemetry
9% - CW
9% - Transponder

5. Did you submit listening reports?

57% - No, I did not submit
29% - Yes. To the AMSAT Bulletin Board
17% - Yes, Other (please specify): to specified email address for telemetry, secret word, or certificate; Live OSCAR Satellite Status Page: http://oscar.dcarr.org/; Audio recordings to SoundCloud http://soundcloud.com;
3% - Yes, to YouTube
1% - Yes, to Vimeo

6. Did you use the ARISSat-1 Telemetry Program (http://www.arissattlm.org/)?

61% - No, I did not use the program
34% - Yes, the Windows version
3% - Yes, the Mac version

7. Did you forward captured BPSK telemetry to the ARISSat-1 TLM Server?

82% - No
18% - Yes

8. Will you use the archived telemetry (http://www.amsat.org/amsat/ftp/telemetry/arissat/)?

63% - No, I don't plan to do anything with it
35% - Yes, for personal interest
2% - Yes, I am an educator; I plan to use it in a class assignment
1% - Yes, I am a student; I plan to use it in a class assignment
1% - Yes, I plan to write a paper on what I discovered

9. Did you view the submitted videos about ARISSat-1 on YouTube/Vimeo?

57% - No
43% - Yes

10. Did you view the SSTV Gallery (http://www.amsat.org/amsat/ariss/SSTV/)?

67% - Yes
18% - No
15% - I didn't know about it

11. How many children did you share ARISSat-1 with?

60% - Not yet
30% - Yes, to my kids
5% - Yes, to my youth group (for example: Scouts)
3% - Yes, to a class (Primary, Secondary)
2% - Yes, to a class (University)

12. What did the children find most fascinating?

Listening to an object in space; hearing the greetings from space in different languages, especially other kids; hearing the funny sound that was SSTV; viewing the SSTV pictures from space;

13. Where did you get your information about ARISSat-1 from?

60% - ARISSat-1 Official website (http://www.arissat1.org/v3/)
59% - AMSAT.org website (http://www.amsat.org)
18% - AMSAT News Service (ANS) Bulletins
18% - ARRL website
16% - Other (please specify): Work the FM Ham Satellites (http://www.work-sat.com); and many other mailing lists and websites too numerous to list.
15% - ISS Fan Club (http://www.issfanclub.com/)
11% - ARRL Letter
9% - Ham Nation (http://twit.tv/hn)
7% - NASA website (http://www.nasa.gov/audience/foreducators/hammin-it-up.html)
6% - Friend
4% - Local Club Newsletter
3% - RadioSkaf (http://radioskaf.ru/)
3% - RS0ISS (http://rs0iss.ru/)
2% - EETimes Blog – Chips in Space (http://www.eetimes.com/electronics-blogs/4218141/Chips-in-Space)

14. How did you track ARISSat-1?

37% - Other (please specify): Orbitron; Gpredict; CalSat32; WXtrack
34% - Online web-based tracker
19% - HamRadio Deluxe
13% - SatPC32
10% - iPhone App
7% - Nova
6% - Android App
2% - MacDoppler

15. What Radio did you use to listen to ARISSat-1?

56% - Base Station Radio
40% - Handy Talky (HT)
25% - Mobile Radio
9% - Other (please specify): Scanner
8% - FunCube Dongle Pro
3% - I listened on the Internet

16. What antenna did you use to listen to ARISSat-1?

54% - Other (please specify): Various commercial vertical and yagi antennas; J-Pole
25% - Homemade yagi antenna
25% - Whip antenna (rubber duck)
18% - Arrow antenna
3% - I listened on the Internet

17. Please tell us a little about yourself

95% - Amateur Radio Operator
12% - Other (please specify): Shortwave Listener (SWL); Retired;
4% - Educator, University
3% - Educator Primary, Secondary
2% - Student University
1% - Student Primary, Secondary

18. Where are you located?

61% - North America
24% - Europe
8% - Asia
4% - Australia (I was reminded that New Zealand was not part of Australia – our apologies!)
2% - South America
1% - Africa

For future satellites, what activities would you like to see?

In order of most frequently mentioned: SSTV, Transponder, Telemetry, Repeater

New Strategy for AMSAT *Fox* CubeSat

Tony Monteiro, AA2TX
AA2TX@amsat.org

Introduction

A CubeSat is a relatively new small satellite concept that was originally proposed by Stanford University Professor and AMSAT member Bob Twiggs, KE6QMD. He and Professor Jordi Puig-Suari of Cal Poly collaborated and published the CubeSat Design Specification. Their main purpose was to try to reduce launch costs so that university students could participate in the development and operation of a real, albeit tiny, satellite.

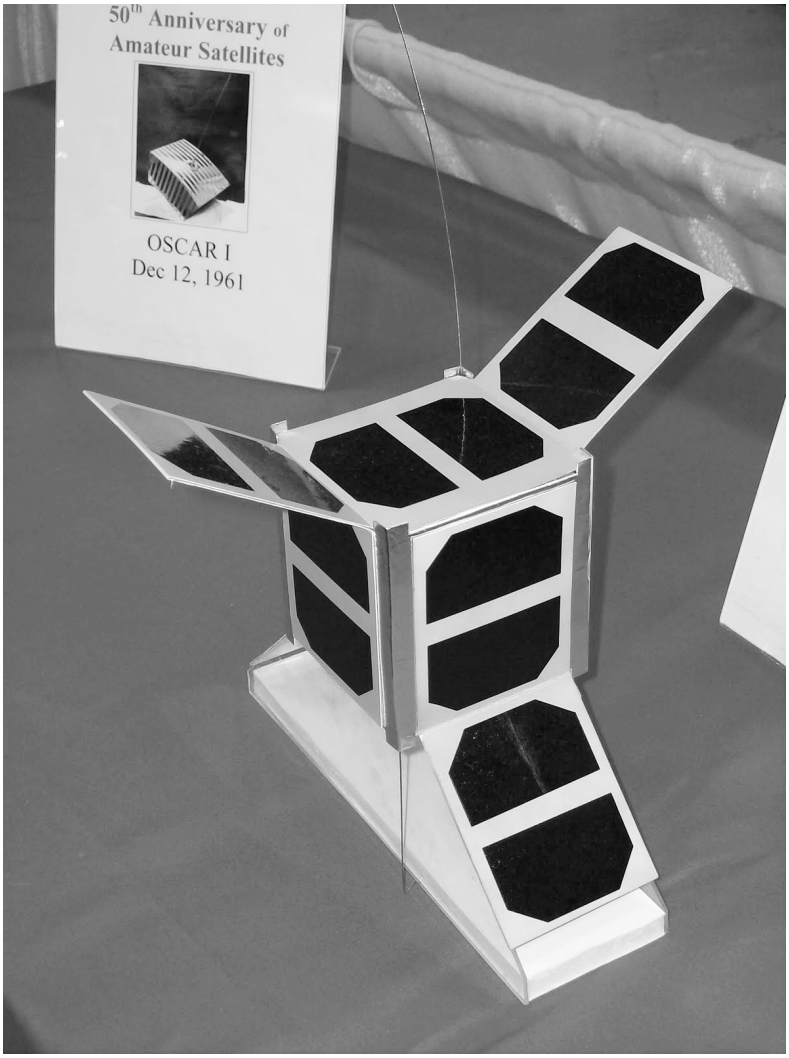

Photo of *Fox* CubeSat model taken by Keith Baker at Dayton 2011
(model by Bob Davis and Steve Christie)

While AMSAT has pioneered the development of small, low-cost satellites, the CubeSat concept takes this idea even farther (and smaller!) Our AO-51 satellite is a relatively tiny 10-inch cube that weighs less than 25 pounds. A basic CubeSat on the other hand is an even smaller 4-inch cube and weighs less than 3 pounds. AMSAT has adopted the CubeSat idea for our next satellite project to take advantage of the low launch costs. The small size however, does pose some interesting design challenges. The AMSAT Board of Directors approved the *Fox* satellite project in late 2009 but with ARISSat-1 development still in full swing, it had to be deferred.

Just a few days after completion of ARISSat-1, the *Fox* program was started. Several of us met at the 2010 Space Symposium and got together to discuss ideas. Over the next several weeks, these ideas were further developed and finally formalized in a System Requirements Specification document in January of this year. The spec incorporated many ideas that had never been tried before on a (1-Unit) CubeSat. These included deployable solar panels, an advanced power system, a high-performance processor, a LINUX-based operating system, a software upload capability, and a software-defined transponder (SDX) that could support linear and digital modes. Since the battery in AO-51 was known to be having problems, the specifications also included a hardware, analog FM transponder so the Fox satellite could be flown as an eventual replacement.

Concept Review

The engineering team has been working on high-level designs for implementing the new satellite and got together at the end of April to have a Concept Review. Many innovative ideas were presented and there was good progress in many areas. A number of significant problems and issues were also identified.

One key problem area was in thermal and power analysis. These are closely related because they are both driven by the illumination and infrared radiation that the satellite sees in orbit. Thermal analysis is critical to understand the temperature extremes that the avionics will experience and the power available from the solar panels is one of the most important elements needed in the satellite design. This is especially true for a CubeSat as the power available will be quite limited due to the small size of the solar panels.

There were significant problems with the tool chain that had been used on previous AMSAT projects. The optical and IR radiation analysis tool set, NEVADA/VEGAS, uses orbital elements as input but we did not have a good tool produce them. The satellite will use magnetic stabilization which causes on-orbit maneuvering but again there was no good way to generate the input data needed to model this. Unfortunately, these tools are very expensive and there are no "open-source" or free versions available as an upgrade. As a result, a tedious trial and error approach as well as a certain amount of guesswork was needed to generate the input.

After the NEVADA/VEGAS tools are run, the output files are incompatible with the input format needed by the SINDA thermal analyzer tool. This required tedious hand editing of intermediate files and results in a loss of traceability.

This was situation was deemed unacceptable for the new *Fox* program so Dick Jansson, KD1K, and Bob Davis, KF4KSS, set to work to improve this process. They have made substantial improvements including a new GUI tool to generate orbital elements and a format converter tool to eliminate hand editing of intermediate files. As of July, they were able to complete a detailed analysis of the thermal and power available for the basic CubeSat without the deployable solar panels. While this has been tremendous progress, there is still much work needed to add the analysis of the deployable panels.

Another key issue noted at the Concept Review was the need to study the radiation sensitivity of our high-performance processor. We had selected the TI OMAP-3 processor, which was developed for use in new smart cell phones since it could provide both the internal housekeeping (IHU) functions and a software defined transponder (SDX) capability. It is a physically small, highly integrated chip set which helps fit into our limited space and was specifically designed for battery power operation.

It soon became clear that due to the radiation, error-correcting RAM would be required to make this work. This adds significant complexity to an already challenging design but Bdale Garbee, KB0G, and Keith Packard, KD7SQG, agreed to take on this challenge. However, there was also a major concern about the long-term survivability of the processor itself.

Since it was designed for cell phones not satellites, the manufacturer has not published radiation test results on the device. In May, Alan Biddle, WA4SCA, joined the team to take on the challenge of flushing out the radiation issues. He has made good progress in modeling the radiation environment using the SPENVIS tools that are available from the European Space Agency (ESA.) Although we have not been able to identify any actual test data, two different experts gave us their opinions that the device would only last about 1 year in orbit. This would not be acceptable for the *Fox* satellite. Alan has been working our AMSAT "friends and family" network to try to find a way to conduct our own radiation test on a prototype processor unit but so far we have not been able to do that. We need to have confidence that our processor will survive before going further down this path.

New Strategy

Identifying, analyzing and solving these types of problems is a normal part of any advanced research and development project. Thorough analysis and in-depth technical work is always needed to be successful when pushing the technology envelope. It takes a certain amount of creativity, effort and time to sort out the issues.

When we started on *Fox*, the AMSAT operations team had noticed problems with the battery on AO-51 but the satellite was still working quite well and we were not expecting to need a replacement in the immediate future. Since that time, one of the cells of the battery has shorted and another cell has become weak leaving AO-51 in a precarious state. The operations team has done a great job keeping AO-51 running but it has become crystal clear that we need to develop a replacement satellite sooner rather than later.

In order to be more responsive, the *Fox* project is being split into a complementary pair of satellites named *Fox-1* and *Fox-2*. *Fox-1* will address the need to quickly develop and launch a replacement for the rapidly fading AO-51. The advanced technology work will continue and become *Fox-2*.

Fox-1 Overview

The primary mission of the *Fox-1* satellite is to provide a wide-area, amateur radio communications capability that can be accessed using very simple ground station equipment such as a handheld FM transceiver paired with a small, handheld beam antenna. This is our intended replacement for AO-51.

In our power baselining analysis, we found that we would have enough power to run a basic FM transponder without requiring deployable solar panels. Eliminating these significantly simplifies both the mechanical design of the structure as well as the power system electronics.

To maximize the effectiveness of the power available, *Fox-1* will use 2-meters for the downlink and 70-cm for the uplink. The lower path loss on 2-meters will make the satellite quite a bit easier to receive than if 70-cm were used and the uplink will still be sensitive enough to allow access with only an HT driving a hand-held beam.

Providing only an FM transponder will allow the use of a high-efficiency, class-C, RF power amplifier and further optimize the use of the limited power available. We expect to be able to provide at least 400 mW EIRP on the downlink.

The satellite will use magnetic stabilization and we are working on way to deploy a full-sized, 2-meter dipole antenna that will be aligned with the earth's magnetic field. This is no small feat as the antenna will be many times larger than the satellite.

Fox-1 will be designed for a sun-synchronous, circular orbit at 650 km rather than the 800 km of AO-51. This will still provide a pretty good communications range while having somewhat lower path losses. At 650 km, we will easily meet the CubeSat spec's debris mitigation requirements since the orbit will naturally decay in about 25 years. The radiation exposure will also be lower which will help prolong the life of the electronics and there are plenty of launch opportunities available to 650 km as well.

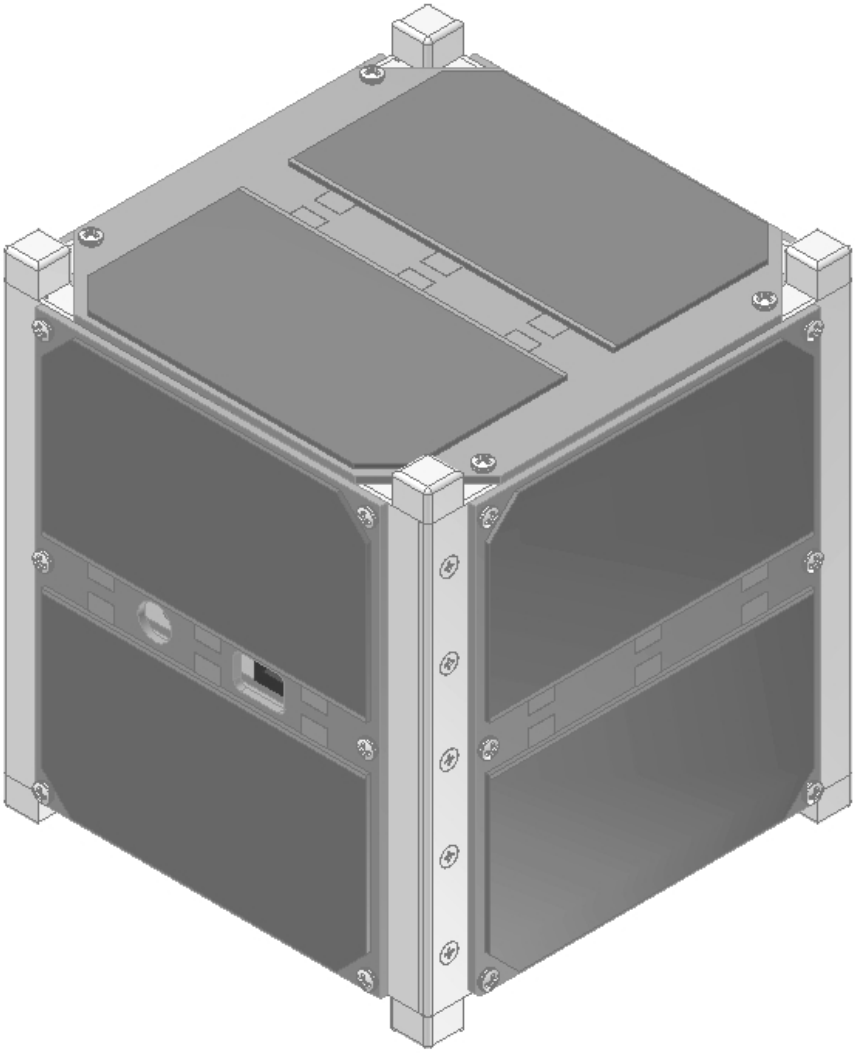

Engineering drawing of new *Fox-1* CubeSat by Bob Davis

The IHU will be based on a low power microcontroller with a hardware-based command decoder. The IHU will be used primarily to collect and send telemetry information and to run a science experiment. It will not be mission-critical for the FM transponder which will be designed to continue to operate in the event of a processor failure. This significantly reduces the importance of radiation sensitivity.

We will be continuing our work with university students for the 2011-2012 academic year. Engineering students at Penn State University will be providing the science experiment as their capstone senior design project. The experiment will be to directly measure the rate of spin of the satellite about it's Z axis and to measure the deviation *(i.e. wobble)* about the axis. After completion, the student experiment will be integrated with *Fox-1* and will be operated in orbit by AMSAT.

We believe our ongoing partnership with university students will help us to qualify for NASA's Educational Launch of NanoSat (ELaNa) program. This program provides subsidized CubeSat launch opportunities but had previously been available only to universities. It was changed this year to allow non-profit organizations like AMSAT to participate. We will significantly reduce our launch costs if our proposal is accepted. Of course, there is no assurance that our proposal would be accepted but we would still be able to purchase a launch as we had originally planned. In any case, we will be targeting a launch date for *Fox-1* in the second half of 2013.

Fox-2 Overview

The work on *Fox-2* will continue so that we will be in a position to include more advanced technologies in our next satellite. For example, it is critical that we continue our radiation studies to understand the processing capabilities that can be made available on a CubeSat. We would still like to fly a software-designed transponder (SDX) on a long-life mission but we need to understand the survivability of the available components.

With *Fox-1* providing an FM transponder, the *Fox-2* design will instead focus on a linear transponder. A good linear transponder requires considerable power to run it so *Fox-2* will need the cutting-edge spaceframe with deployable solar panels to provide this power as originally envisioned and as shown in the "Dayton" model photo. The panels will drive an advanced power system with maximum power point tracking to squeeze the most out of these panels. This will require considerable research and design work.

The target orbit for *Fox-2* will be a circular and sun-synchronous at 800 km like AO-51. This would provide a good communications range and CubeSat launches to this orbit have been readily available. At this altitude however, the radiation environment is harsher which re-enforces the need to continue the radiation studies. We would also need to find a way to meet the CubeSat debris mitigation requirements since a basic CubeSat in this orbit might not decay for 100 years.

With a more powerful processor and more power available, *Fox-2* could support a much more advanced science mission. This opens up additional possibilities for collaborating with university researchers and could help us in partnering for additional launch opportunities. While there are still many unknowns and much research to be done, we are targeting a launch in the 2015 time frame.

Summary

AMSAT has adopted a new strategy for the *Fox* program. Rather than develop a single, multi-mission (and very complex) satellite, we will develop a much simpler FM transponder satellite, *Fox-1*, as a replacement for AO-51 and *Fox-2* as an advanced-technology, linear transponder satellite.

This new strategy eliminates several major technical risks from the *Fox-1* design. That will allow us to have a replacement for AO-51 in a much faster time frame and the engineering team will more quickly gain experience in the full development cycle of our first CubeSat. It also may allow us to qualify for the 2011 NASA ELaNa program.

Eliminating the need for an FM transponder will also help reduce the complexity of the *Fox-2* design and will provide a clearer path to a new linear transponder satellite. We hope to learn from the experience of developing *Fox-1* and incorporate our new knowledge into the design of *Fox-2*.

Fox-1

- 650 km orbit
- No deployable solar panels
- FM transponder
- Simple IHU for telemetry and command
- 2013 launch target

Fox-2

- 800 km orbit
- Deployable solar panels
- Linear Transponder (SDX)
- Powerful IHU running Linux
- Advanced experiment support
- 2015 launch target

There are still many opportunities for designers interested in working on these satellites especially in the areas of project management, systems engineering, thermal analysis, mechanical design, electronics design, system test and test equipment development. If interested, please send email to Tony Monteiro, AA2TX@amsat.org. Thank you!

AMSAT *Fox*

AMSAT Engineering Documentation

By Tony Monteiro, AA2TX
AA2TX@amsat.org

AMSAT has not traditionally used any sort of formal engineering process. The resulting lack of traceable documentation has often resulted in miscommunications, unreliable schedules, unnecessary re-work, spacecraft operational issues and unforeseen costs. The AMSAT Fox program is attempting to improve on this situation by providing engineering documentation at each stage of development. We are archiving all of this documentation on an on-line, backed-up, version control server.

AMSAT is a truly unique organization in that we are a non-profit corporation that manufactures satellites using a geographically distributed, all-volunteer engineering staff. There are no common or established guidelines to cover our situation and the balance between too much and too little formality is one we will have to work out. As such, the Fox program practices are themselves a work in progress. We intend to draw from industry sources, especially NASA and IEEE, and (hopefully) use good judgement. When the first satellite has been completed, we will have an archive of traceable documentation. This can serve as the basis for planning and executing future satellite programs and can be updated to apply the sometimes-painful lessons learned of what went well and what did not.

Due to US State Department ITAR[1] restrictions, our document server is only available to project members who have been vetted to meet the requirements for a "US-person." AMSAT, as an educational organization, would like to publicly release the majority of our design documentation to serve as a learning tool to anyone interested in satellite development. However, this must be done in a specific way to meet the ITAR requirements. The information must first be released via an openly available publication.

We would also like to be able to discuss our satellite projects with our own members, some of whom are not "US-persons" per ITAR. These AMSAT Space Symposium proceedings provide a convenient mechanism for the needed publication in order to make this information public domain and allow us to communicate with our members.

These Space Symposium proceedings include two of the AMSAT Fox-1 technical documents. These are the Concept of Operations (ConOps) and the System Requirements Specifications.

The Concept of Operations (ConOps) document may be unfamiliar to many readers. A useful set of descriptions can be found in the NASA Systems Engineering Handbook[2]

- "*It describes the system characteristics from an operational perspective and helps facilitate an understanding of the system goals*"[3]

- "*The ConOps is an important component in capturing stakeholder expectations, requirements, and the architecture of a project. It stimulates the development of the requirements and architecture related to the user elements of the system.*"[4]

- "*The ConOps is an important driver in the system requirements and therefore must be considered early in the system design processes. Thinking through the ConOps and use cases often reveals requirements and design functions that might otherwise be overlooked.*"[5]

Note that the ConOps is a qualitative (*i.e. descriptive*) document.

The Systems Requirements Specification, on the other hand, is a quantitative (*i.e. numerical*) document. It provides the top-level technical specifications for the satellite as a complete system. A good requirements document will state what is needed while avoiding unnecessary constraints on the implementation. In other words, it specifies *what* is needed and not *how* to do it. At the systems level, the satellite can be thought of as a "black box." The inputs, outputs, transfer functions, mass, volume, environment and other external characteristics are included and specified in the system requirements.

AMSAT has adopted a common industry scheme known as *numbered* requirements. Each individual requirement has a unique number assigned to it. The number allows a very precise reference to a specific requirement and this enhances the overall traceability of the specifications. Design documents will use these references to show which module or subsystem is responsible and how they are meeting each of the requirements.

The engineering documents published in these proceedings are a snapshot of what was available at time needed for inclusion and are intended to be interesting and informative. They may have changed since publication. AMSAT intends to make the majority of the final technical documents available, exclusive of satellite control information, in future publications.

---

[1] International Traffic in Arms Regulations, see:
http://www.pmddtc.state.gov/regulations_laws/itar_official.html
[2] NASA Systems Engineering Handbook, NASA/SP-2007-6105 Rev1
[3] NASA Systems Engineering Handbook, Page 35 Section 4.1.1.3
[4] NASA Systems Engineering Handbook, Page 35 Section 4.1.2.1
[5] ibid.

Date: September 19, 2011
Version: 1.0

AMSAT *Fox-1* Satellite Concept of Operations

1 Introduction

The AMSAT *Echo* satellite, also known as AO-51, has been the most widely used amateur satellite due to its ability to provide basic radio communications with very simple ground station equipment. It provides an FM repeater function that has very wide geographical coverage allowing amateur radio operators to communicate over substantial distances using just a handheld transceiver (i.e. a *walkie-talkie*) and a small handheld antenna. This type of satellite operation is often referred to as the *EasySat* mode due to its simplicity. It is extremely valuable in providing an introduction to satellite communications and is often used for demonstrations given at schools, to scouting organizations and at amateur radio publicity events.

After 6 years of service, *Echo* is nearing the end of its life due to battery failure. For the sake of our space education and outreach activities, it is essential that AMSAT quickly provide a replacement for *Echo* that can continue to provide access to the *EasySat* mode. The *Fox-1* satellite is intended as this replacement.

Building on a harsh lesson learned from *Echo* and inspired by the longevity of AO-7[1], the *Fox-1* satellite project will introduce the concept of *designed-in*, partial-failure operation. The satellite will be specifically designed so that when the battery fails, the transponder can continue to operate when the satellite is in sunlight. Similarly, the satellite will be designed so that the FM transponder can operate without relying on ground control or a functioning processor in the IHU. These modes are intended to extend the usable life of the satellite.

In addition to its primary mission as a communications satellite, the *Fox-1* satellite will host an experiment payload. Over the past two academic years, AMSAT has sponsored capstone projects at the State University of New York (SUNY.) These projects provide senior engineering students with exposure to spacecraft development and have been a key component of our space education activities. The past projects have focused on aspects of CubeSat design and construction. Building on this relationship, one of the AMSAT sponsored student projects for the 2011-2012 academic year at SUNY will be to provide the experiment package to be flown on the *Fox-1* satellite.

AMSAT expects to submit a proposal to the NASA ELaNa[2] program for a low-cost launch of this satellite. Proposals will be due in November of this year. If accepted, the launch would be in the 2013 time frame. While AMSAT believes that this project would nicely address the goals and objectives of the NASA program, there can be no guarantee that the proposal will be accepted. However, AMSAT would still be free to purchase a market-rate launch of this satellite through any of the CubeSat launch integrators such as Cal-Poly.

1.1 Program Goals and Objectives

The AMSAT Fox-1 satellite program is intended to:

1. Provide an on-orbit FM transponder to allow wide-area communications between amateur radio operators using simple ground-station equipment.
2. Develop a 1U CubeSat design that can host an experiment payload.
3. Promote closer relationships with universities including student development of satellite components and subsystems.
4. Implement a new engineering process that will improve AMSAT's ability to plan, manage and finance satellite projects.
5. Implement an engineering process that will meet the requirements for submission of proposals to the NASA ELaNa program.
6. Provide required software needed by the AMSAT Operations team to operate the satellite in orbit and to collect and archive telemetry and experiment data.
7. Complete the satellite development in time for a 2H 2013 launch.

1.2 Mission Overview

The primary mission of the satellite is to provide a wide-area, amateur radio communications capability that can be accessed using very simple ground station equipment such as a handheld FM transceiver paired with a small, handheld beam antenna. The satellite communications transponder will employ analog, narrow-band FM like that typically used on the amateur radio VHF and UHF bands. The satellite is expected to support the primary mission for at least 5 years in orbit.

The secondary mission of the satellite is to host an experiment payload. The radio communications capabilities of the satellite will be used to uplink control commands for the experiment as needed and to downlink data collected from the experiment to ground stations.

1.3 Document Scope

The purpose of this Concept of Operations (CONOPS) document is to describe the satellite system and how it will be used. This is not a requirements document but provides operational context that should be helpful in developing and understanding system requirements and interface specifications.

2 System Description

2.1 Spacecraft

The *Fox-1* satellite is expected to have the following features and characteristics:

- 1 Unit CubeSat
- 650 km, sun-synchronous, circular orbit
- FM analog transponder
- 400 mW or greater RF power output
- Uplink on 70 cm band
- Downlink on 2 meter band
- Experiment payload
- Permanent magnetic stabilization
- Deployable antennas (no other deployables)
- Fixed solar panels on all 6 sides for power
- Rechargeable battery to support operation during eclipse
- Simple IHU based on a 16-bit microcontroller
- Proprietary scheme for control uplink
- FSK for sending telemetry and experiment data

This list is preliminary and is subject to change. Please note that this CONOPS is not the controlling document for satellite technical specifications.

2.2 Telemetry and Experiment Data

Telemetry data consists of monitored points that provide a measure of the satellite health. The satellite will autonomously measure these points and transmit them on the downlink.

Experiment data will be collected as per the requirements of the experiment and will be stored and/or transmitted as needed.

The telemetry and experiment data, will be transmitted in the clear allowing any ground station to receive it. The information needed to demodulate and decode the downlink signal will be placed in the public domain. An open-source, software package for decoding the telemetry and experiment data will be made available by AMSAT.

2.3 Satellite Commands

The satellite will accept commands from a control station. These are used to control the mode and operation of the satellite. Commands are intended to be limited to use by authorized stations only. Private codes and/or unpublished information will be required to command the satellite.

2.4 Ground Control Stations

It is expected that control stations will not require any specialized radio equipment but may need to be able to generate higher radiated power levels than typical for users in

order to gain control of the satellite. This could be accomplished with a high-gain Yagi antenna and/or a high-power amplifier.

In order to command the satellite, specialized software will likely be required. This software will be provided as part of the satellite development effort.

2.5 Amateur Radio User Stations

This satellite will use radio standards commonly used on the amateur radio VHF and UHF bands and will not require any specialized equipment for normal operation. A handheld, dual-band FM transceiver paired with a small hand-held Yagi antenna should be considered a typical user station. Operation with fixed, omni-directional antennas should also be possible with typical amateur radio base and mobile transceivers.

3 Satellite Operational Modes

3.1 Quiescent Mode

This mode will be used when the satellite is flight ready but has not yet been integrated into the deployer (P-POD.) A "*Remove Before Flight*" pin, inserted into its receptacle on the satellite, will disconnect the battery and prevent any operation of the avionics.

3.2 Deployer (P-POD) Mode

After the satellite is integrated with the deployer, the "*Remove Before Flight*" pin will be pulled but deployment switches on the satellite will prevent power-up of the avionics. In this mode, a test umbilical cable can be connected to a port on the satellite which will allow the avionics to be powered, the battery to be charged and diagnostic tests to be run. Once a CubeSat has been integrated with its deployer and the launch acceptance tests have been run, the only way to know if a satellite is still functional is via these diagnostic tests. Therefore, the diagnostics should be as thorough as possible within the limitations of the deployer environment.

3.3 Startup Mode

When the satellite is released in orbit, the deployment switches on the satellite will be activated allowing the satellite to power up. At this point, the satellite will enter Startup Mode. The satellite will time a 30-minute interval and then deploy the antennas. This delay is required by the CubeSat Design Specification. After deploying the antennas, the satellite will enter Transponder Mode.

3.4 Transponder Mode

In Transponder Mode, signals appearing on the uplink will be repeated on the downlink. Amateur radio user stations can use the satellite for general communications with each other. The satellite will simultaneously send telemetry data on the downlink using the frequency spectrum below the audible range so as not to interfere with transponder communications.

The satellite will also monitor the uplink frequency for a command from a control station. A control station can command the satellite to enter Command Mode.

3.5 Command Mode

Command Mode is intended to support experiments that require more satellite resources than can be provided in Transponder Mode. This would include more power and higher downlink data rates.

In Command Mode, signals appearing on the uplink will not be repeated on the downlink. The satellite will use the downlink exclusively to send telemetry and experiment data. It will also monitor the uplink for commands from a control station.

After 24 hours, the satellite will automatically return to Transponder Mode unless another command is received. For multi-day experiments, a control station would need to send a command at least once a day to the satellite to keep it in Command Mode. A control station can also directly command the satellite to enter Transponder Mode**.**

3.6 Transmitter Inhibit

In order to meet FCC requirements, the satellite will accept a control station command to inhibit the transmitter regardless of the operating mode. Once inhibited, the transmitter will not be activated under any conditions but the satellite will continue to monitor the uplink for commands. A control station can send a command to remove the inhibit and re-enable the transmitter.

3.7 Partial Failure Operation

Partial failure tolerance is intended to extend the usable life of the primary mission of the satellite. An experiment may or may not be operable under a partial failure scenario.

3.7.1 Battery Failure

If the battery deteriorates or fails completely including a short circuit, the satellite will continue to operate on its solar panels while in the sun. In eclipse, the satellite may power down. When back in sunlight, the satellite will automatically enter Transponder Mode.

3.7.2 IHU Processor Failure

The satellite will operate in Transponder Mode by default and will not require intervention from a ground control station. If the processor on the IHU fails, there may be limited control of the satellite and limited or no telemetry data available but the transponder will continue to operate.

4 Mission Operations Overview

The AMSAT operations and engineering teams will work together to commission the satellite after launch. Commissioning is expected to last for only a few days to insure the satellite is operating nominally. After commissioning, the satellite will be turned over to the operations team. It is expected that the operations team would then open the satellite for general communications use by any licensed amateur radio station.

When required for experiment operation, an authorized control station can command the satellite to enter Command Mode. This will turn off the repeater function and enable the transmission of the telemetry and experiment data. When this data transfer has been

completed, the authorized control station can command the satellite to return to Transponder Mode.

It is expected that the AMSAT operations team will collect and archive all telemetry and experiment data and make it freely available on the Internet.

5 Reference Documents

1. CubeSat Design Specification Rev. 12. by The CubeSat Program Cal Poly SLO available from: http://www.cubesat.org/images/developers
2. ITU Radio Regulations, Edition of 2008. available from http://www.itu.int/publ/R-REG-RR-2008/en

---

[1] AMSAT OSCAR 7 (AO-7) was launched in 1974 and failed in orbit in 1981 when its battery short-circuited. In 2002, at least one of the battery cells opened up allowing the satellite to resume operation when the solar panels are illuminated. As of July 2011, after 37 years in space, AO-7 continues to be operational in sunlight.

[2] Information on the NASA Educational Launch of NanoSatellites (ELaNa) program can be found on the NASA web site: http://www.nasa.gov/offices/education/centers/kennedy/technology/elana_feature.html

Date: October 5, 2011
Version: Version 1.0

AMSAT *Fox-1*

System Requirements Specification

1 Introduction

This document specifies the system level technical requirements for the AMSAT *Fox-1* satellite project. This 1 Unit CubeSat is a part of the AMSAT Fox program and includes a subset of the technical capabilities envisioned for the overall program.

Fox-1 is specifically intended as a replacement for the failing AMSAT *Echo* (i.e. AO-51) satellite. *Echo* has been the most widely used amateur satellite due to its ability to provide basic radio communications with very simple ground station equipment. Its FM repeater provides very wide geographical coverage allowing amateur radio operators to communicate over substantial distances using just a handheld transceiver (i.e. a *walkie-talkie*) and a small handheld antenna. This so called "*EasySat*" mode is extremely valuable in providing an introduction to satellite communications and is often used for demonstrations given at schools, to scouting organizations and at amateur radio publicity events. *Fox-1* will not duplicate all of the features and modes of Echo but its primary mission is to provide an FM Transponder in order to allow continued access to this *EasySat* mode of communications.

In addition to its mission as a communications satellite, *Fox-1* will host an experiment payload. The satellite will reserve mass and volume for the experiment and will provide DC power and a communications facility. The experiment is expected to be provided by students at Penn State University – Erie through an AMSAT sponsored senior design project.

1.1 Document History

DATE	VERSION	SUMMARY
October 5, 2011	1.0	From Draft E

1.2 Document Scope

The purpose of this document is to specify the technical requirements of the satellite at the system (i.e. "black box") level. It is intended to be used to by the hardware, software and mechanical designers to develop the architecture/high-level design specifications. It is also intended to be used for test planning and development.

1.3 Document Format

This document provides the requirements in numbered format. Each requirement is assigned a unique number. Additional information such as comments or examples that are provided for guidance or clarity is *italicized* to distinguish them from requirements.

1.4 References

1. AMSAT *Fox-1,* Concept of Operations, Version 1.0, September 19, 2011
2. CubeSat Design Specification Rev. 12. by The CubeSat Program Cal Poly SLO available from: http://www.cubesat.org/images/developers
3. Launch Services Program, Program Level Poly Picosatellite Orbital Deployer (PPOD) and CubeSat Requirements Document LSP-REQ-317.01 Revision Basic (from NASA)
4. ITU Radio Regulations, Edition of 2008. available from http://www.itu.int/publ/R-REG-RR-2008/en

2 General Requirements

2.1 CubeSat Requirements

2.1.1 The satellite shall meet the requirements specified in the CubeSat Design Specification Rev. 12.

2.1.2 The satellite shall meet the requirements specified in the NASA LSP-REQ-317.01 Revision Basic.

2.1.3 The satellite shall meet the requirements for a 1 unit (single) CubeSat.

2.1.4 The satellite shall provide mass for an experiment payload up to 100 g.

2.1.5 The satellite shall provide volume for an experiment payload up to 95 x 95 x 15.7 mm.

2.2 Environmental Requirements

2.2.1 The satellite avionics shall be designed for -40C to +70C operating temperature.

2.2.2 The satellite shall be designed to operate in a 650 km, sun-synchronous, circular orbit.

2.2.3 The satellite shall be designed to tolerate the radiation environment in orbit.

2.3 Reliability Requirements

2.3.1 The satellite shall be designed for a minimum 5-year, on-orbit lifetime.

2.4 RF Frequency Requirements

2.4.1 All RF transmitters shall meet or exceed the requirements specified in the ITU Radio Regulations, Technical Characteristics, Volume 3, article 3.

2.4.2 All satellite uplinks shall be in the 70 cm band of the amateur satellite service.

2.4.3 All satellite downlinks shall be in the 2 meter band within the amateur satellite service.

2.4.4 All satellite transmitter and receiver frequencies shall deviate by no more than 5 parts-per-million from the specified values including initial accuracy and temperature variation.

2.4.5 All satellite frequencies shall be coordinated with the IARU.

Note that the band plan with the actual coordinated frequencies will be specified in a separate document.

3 Functional Requirements

3.1 Antenna System

3.1.1 The satellite shall include a deployable antenna system.

3.2 Attitude Control

3.2.1 The satellite shall incorporate passive magnetic stabilization to align the deployed antennas with the magnetic field of the earth.

3.3 Access Ports

3.3.1 The satellite shall include a "Remove Before Flight" pin as per the CubeSat Design Specification.

3.3.2 The satellite shall include an umbilical port as per the CubeSat Design Specification.

3.4 Pre-launch Features

3.4.1 The satellite secondary battery and photovoltaic panels shall be electronically disconnected from the avionics when the "Remove Before Flight" pin is inserted, regardless of the state of the deployment switch(es).

3.4.2 The satellite shall provide the means to charge the secondary battery via the umbilical port while integrated with the P-POD.

3.4.3 The satellite shall provide the means to run diagnostic tests via the umbilical port while integrated with the P-POD.

3.5 Power

3.5.1 The satellite shall produce electrical power from sunlight and the secondary battery.

3.5.2 The satellite shall produce electrical power while in sunlight regardless of orientation and while tumbling or spinning.

3.5.3 The satellite shall produce sufficient average electrical power to operate continuously in the orbit of maximum eclipse.

3.5.4 The satellite shall provide sufficient secondary battery capacity to operate continuously in the orbit of maximum eclipse.

3.5.5 If the secondary battery fails, including a short-circuit condition, the satellite shall continue to operate using only the photovoltaic panel power when in sunlight.

3.6 Experiment

3.6.1 The satellite shall provide current limited DC power for an experiment payload.

3.6.2 The satellite shall provide a means to activate and deactivate the experiment payload.

3.6.3 The satellite shall provide a means to telemeter data from the experiment payload.

Note that the experiment payload will be specified in a separate document.

3.7 RF Uplink

3.7.1 The satellite shall include an FM uplink receiver.

3.7.2 The receiver shall have specifications as follows;

Sensitivity	-120 dBm for 12 dB SINAD (min.)
FM Deviation	5 kHz
Audio Bandwidth	3 kHz
Input Frequency Acceptance	Receiver shall accept signals that are off frequency by ±2.5 kHz (min.)

3.8 RF Downlink

3.8.1 The satellite shall include an FM downlink transmitter.

3.8.2 The transmitter shall have specifications as follows;

Power Output	400 mW (min.)
FM Deviation	5 kHz
Audio Bandwidth	3 kHz

3.8.3 The transmitter shall provide a means to prevent over modulation.

3.9 FM Transponder

3.9.1 The satellite shall provide an FM transponder via the RF uplink and RF downlink.

3.9.2 The transponder shall detect the presence of a 67 Hz CTCSS tone on the uplink.

3.9.3 The downlink transmitter shall be keyed (*i.e. PTT-on*) for 2 minutes following detection of the 67 Hz CTCSS tone.

3.9.4 The downlink transmitter shall stay on continuously as long as the 67 Hz CTCSS tone is detected at least once every 2 minutes on the uplink.

3.9.5 The 67 Hz CTCSS tone is not required for a received signal to be repeated on the downlink, once the transmitter has been keyed.

3.9.6 If the downlink transmitter has been un-keyed for a period of 5 minutes, the satellite shall send " HI THIS IS AMSAT FOX " in Morse code via a keyed audio tone on the downlink transmitter.

3.9.7 The satellite shall default to Transponder Mode in the event of an IHU processor failure.

3.10 Telemetry Data

3.10.1 The satellite shall collect telemetry data.

3.10.2 The telemetry data shall include the following measured parameters:

Parameter Name	Description
CELL V	Voltages of battery cells
PANEL V	Voltages of solar panels
TOTAL I	Total DC current out of power system
PA I	DC current into RF power amp
BATTERY T	Temperature of battery
PANEL T	Temperatures of solar panels
PA T	Temperature of RF power amp
OSC T	Temperature of RF oscillators

3.10.3 The measured parameters shall be sampled at least every 15 seconds.

3.10.4 The minimum and maximum values of each of the measured parameters shall be saved in non-volatile memory.

3.10.5 The telemetry data shall also include the following calculated parameters:

Parameter Name	Description
UP TIME	Total seconds since avionics power-up or reset
SPIN	Satellite spin rate and direction

3.10.6 A telemetry frame shall include the current measured values, the saved minimum and maximum values, and the current calculated values.

Note that the telemetry interface will be specified in a separate document.

3.11 Telemetry Transmission

3.11.1 The satellite shall send telemetry using FSK on the RF downlink.

3.11.2 The FSK shall use the frequency spectrum below the audible range.

3.11.3 The telemetry shall be transmitted simultaneously with any transponder communications.

3.11.4 The telemetry transmission shall include telemetry frames.

3.11.5 The telemetry transmission shall include experiment data.

3.12 Command Capability

3.12.1 The satellite shall provide the means to process commands sent via the RF uplink from a ground control station.

3.12.2 The commands received via the RF uplink shall not be repeated on the RF downlink.

3.12.3 The following commands shall be provided.

Command	Operation
TEST	Send test message
INHIBIT	Inhibit RF transmission
RESET	Reset avionics
CLEAR	Clear stored telemetry
TRANSPONDER MODE	Enter Transponder Mode
COMMAND MODE	Enter Command Mode

3.12.4 A TEST command shall cause the satellite to respond by sending " TEST TEST TEST " in Morse code via a keyed audio tone on the RF downlink.

3.12.5 An INHIBIT command shall cause the satellite to cease RF transmissions.

3.12.6 Any command other than INHIBIT shall remove a transmit inhibit condition.

3.12.7 A RESET command shall cause a reset of the satellite avionics.

3.12.8 A CLEAR command shall cause the satellite to clear the saved minimum and maximum telemetry parameter values.

3.12.9 A TRANSPONDER MODE command shall cause the satellite to enter the Transponder Mode.

3.12.10 A COMMAND MODE command shall cause the satellite to enter the Command Mode.

Note that the control interface will be specified in a separate document.

3.13 On-Orbit Operating Modes

3.13.1 The satellite shall provide the following on-orbit operating modes.

Name	Description
Startup Mode	Wait 45 minutes and deploy antennas
Transponder Mode	FM transponder and telemetry active
Command Mode	Telemetry active, no FM transponder

3.13.2 The satellite shall transition between modes as shown in Figure 1.

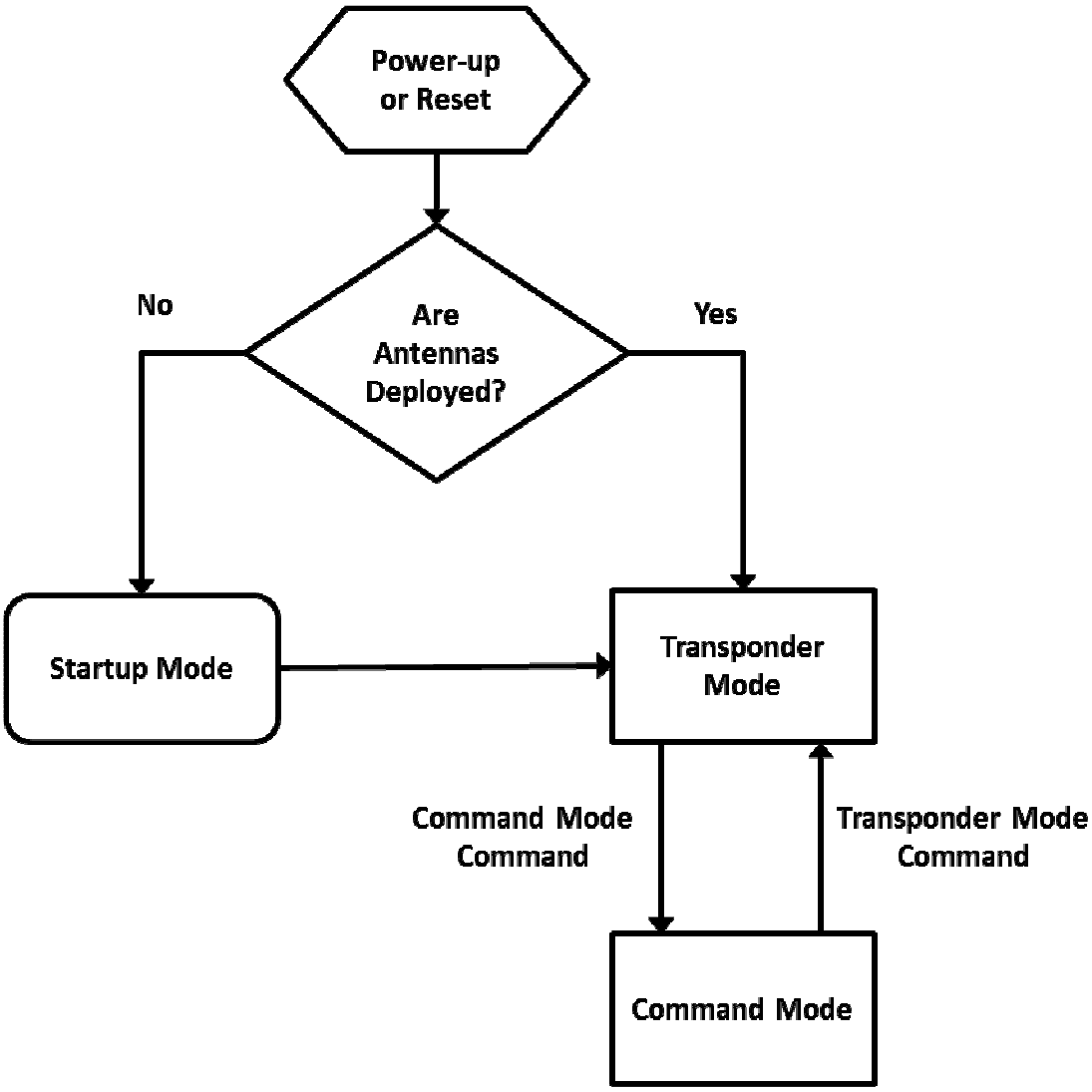

Figure 1. On-Orbit Operating Modes

3.13.3 Upon power-up of the avionics, the satellite shall begin operation from the "Power-up or Reset" state as shown in Figure 1.

3.13.4 A RESET Command shall cause the satellite to begin operation from the "Power-up or Reset" state as shown in Figure 1.

3.13.5 If the antennas have been deployed, the satellite shall enter the Transponder Mode.

3.13.6 If the antennas have not been deployed, the satellite shall enter the Startup Mode.

3.13.7 In Startup Mode, the satellite shall wait 45 minutes, deploy the antennas and then enter Transponder Mode.

3.13.8 In Transponder Mode, the transponder and the telemetry shall be active.

3.13.9 In Command Mode, the telemetry shall be active and the transponder shall not be active. *(i.e. signals that appear on the uplink shall not be repeated on the downlink.)*

3.13.10 If another Command Mode command is not received, the satellite shall automatically enter Transponder Mode 24 hours after having entered Command Mode.

3.13.11 The RF uplink shall be monitored for commands in all modes.

4 External Interface Documents

To fully specify the satellite technical requirements, the following documents must also be provided;

1. IARU Coordinated Frequency Plan
2. Telemetry Interface Specification
3. Control Interface Specification
4. Experiment Payload Specification

5 Summary

The *Fox-1* satellite will be AMSAT's first CubeSat. Its primary mission is to provide an FM Transponder communications capability. The secondary mission is to host a university-provided experiment payload.

Space Radiation and *Fox* Satellites

AMSAT Fox

AMSAT Engineering
2011 Space Symposium

Space Radiation

AMSAT

- What is it?
- Why do we care?
- What can we do about it?

Information provided by WA4SCA

Space Radiation

Type	Source	Composition
Trapped Particles in Van Allen Belts	Solar Wind	High Energy Protons (+ Anti-protons!) High Energy Electrons Bremsstrahlung (X-Rays)
Galactic Cosmic Radiation	Cosmic Rays	Hydrogen to Uranium Nuclei Low Flux, but Very High Energies
Solar Particle Events	Solar Flares and Coronal Mass Ejections	Energetic Electrons, Protons, Alpha Particles

Lower energy particles cause cumulative damage. Higher energy particles cause Single Event Upsets. All can impact electronics. Comprehensive component testing is complicated and expensive.

Space Radiation Model

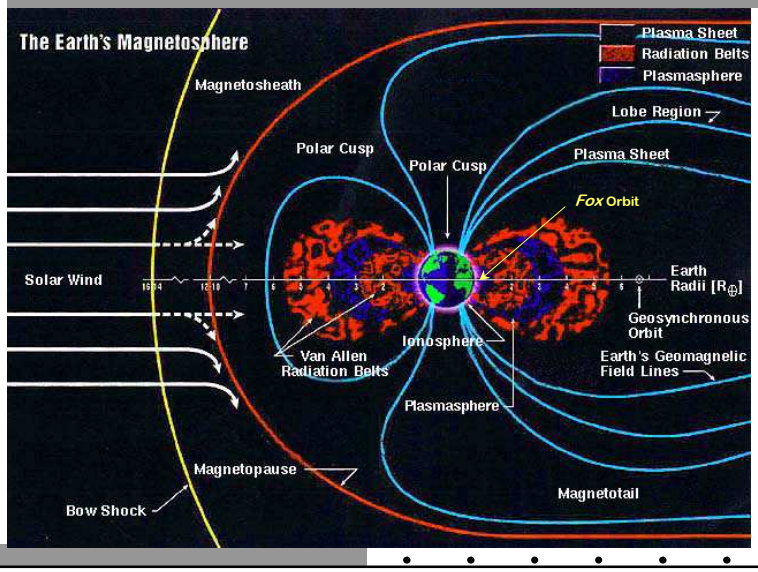

South Atlantic Anomaly

- Caused by the Earth's magnetic field being displaced about 280 miles, effectively lowering the Van Allen Belts there.

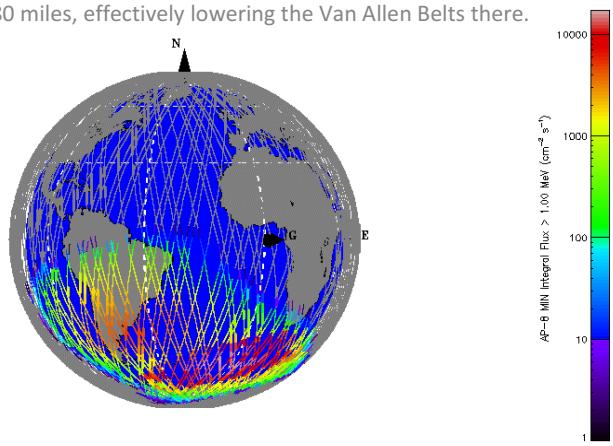

- The major source of radiation for *Fox* satellites

Calculated Total Radiation Dose

Satellite	Altitude (km)	Inclination (degrees)	kRAD/year (50% confidence)	kRAD/year (98% confidence)
ARISSat-1	350	52	1	7
Fox-1	650	98	7	62
Fox-2, AO-51	800	98	11	99
AO-7	1500	101	90	450
Geosynch	35786	0	2120	15500

Data from ESA SPENVIS

Radiation Effects on Components

- Transient errors
- Logic and memory stuck-bit errors
- CMOS latchup
- Electrical leakage in insulators
- Parameter drift
- Gate rupture of MOS devices

Example Component Lifetimes

Component	Typical Failure Dose kRAD(Si)	650 km Orbit Years (50% conf)	650 km Orbit Months (98% conf)
INTEL 80386	7.5	1	1
MAX724 DC/DC	20	3	4
2N2222 Transistor	30	4	6
AD574 12-Bit ADC	30	4	6
TI OMAP5912	35	5	8
U310 JFET	50	7	10
Hitachi EEPROM	>100	>14	>24
Rad-Hard component	>100	>14	>24

Aluminum Shielding Effectiveness

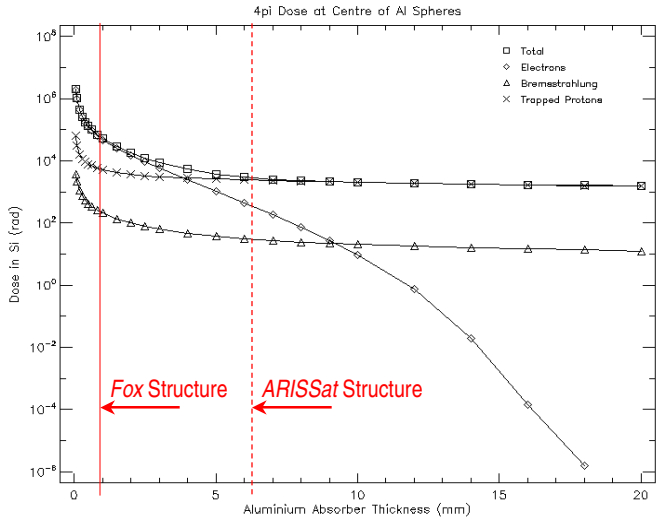

Fox-1 Mitigation Strategy

- Targetted component shielding
- CMOS latch-up protection circuitry
- Limited use of Rad-hard/tolerant parts
- CPU failure tolerant (not mission critical)
- Analog hardware transponder

Fox-2 Radiation Issues

- SDX requires powerful CPU
- CPU is mission critical
- Need confidence that CPU will survive
- Rad-Hard CPU - very expensive
- CubeSat constraints
  - Power
  - Volume
  - 3 lb weight limit

Fox-2 Radiation Strategy

- Rad-tested COTS parts - published papers
- Radiation testing of desireable components
- Rad-tolerant FPGAs
- Radiation tolerance at the circuit card level
  - Redundancy
  - Error Correction
  - Event Recovery

AMSAT *Fox-1* Overview

AMSAT Fox

AMSAT Engineering Team

2011 Space Symposium

Fox-1 Introduction

AMSAT

- AO-51 replacement
- 1-Unit CubeSat (4" x 4" x 4")
- Target orbit 650 km
- Magnetically stabilized
- FM transponder
- IHU for telemetry and command
- Science experiment

Fox-1 Operational Modes

- Transponder Mode
  - FM repeater
  - Telemetry data sent as low-speed FSK in sub-audible band
- Command Mode
  - Transmitter dedicated for data downlink
  - High-speed FSK
  - More power available for running experiment

Special "*ZombieSat*" Features

- Designed to extend usable life
- FM Transponder will operate with dead cpu
- FM Transponder will operate without ground station intervention
- FM Transponder will operate while in sunlight even with dead (shorted) battery

Fox-1 Systems

- Power System
- Internal Housekeeping Unit (IHU)
- RF System
- Antennas
- Science Experiment

Fox-1 System Diagram

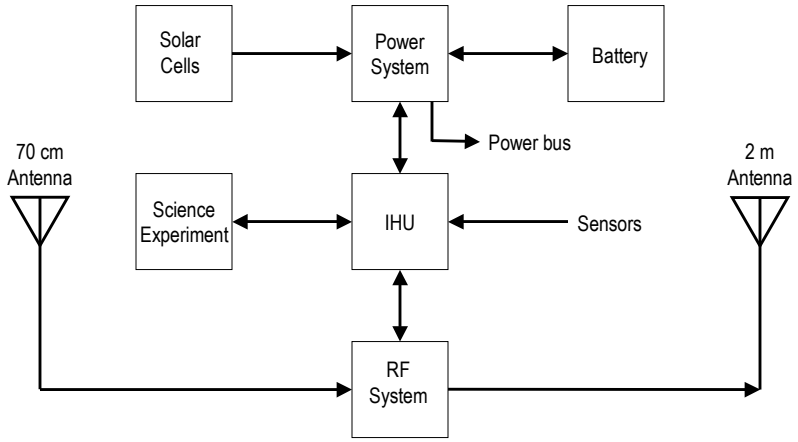

Power System - Solar Panels

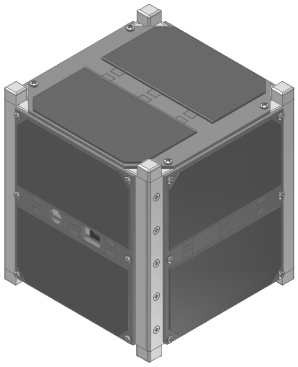

- 6 solar panels
- 2 cells per panel
- Spectrolab Ultra Triple Junction
- Space-rated, high radiation tolerance
- 28% conversion efficiency

Solar Cell Characteristics

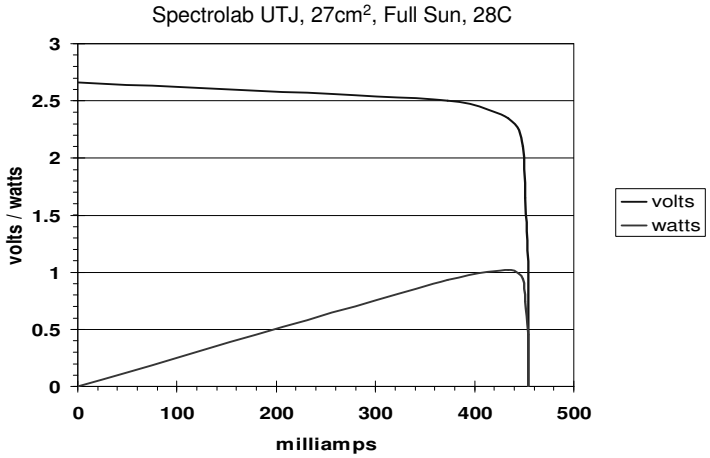

Maximum Power Point Tracking

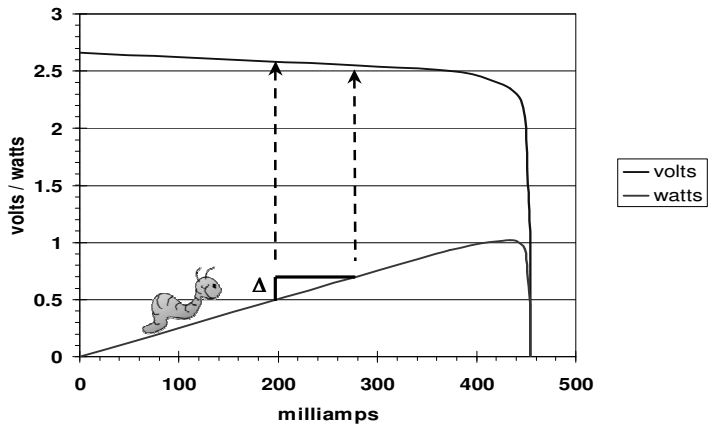

Generated Solar Power

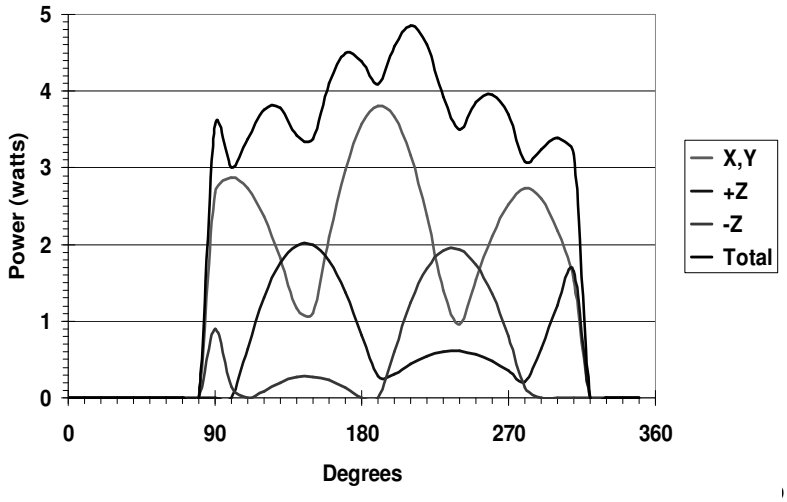

MPPT Operation

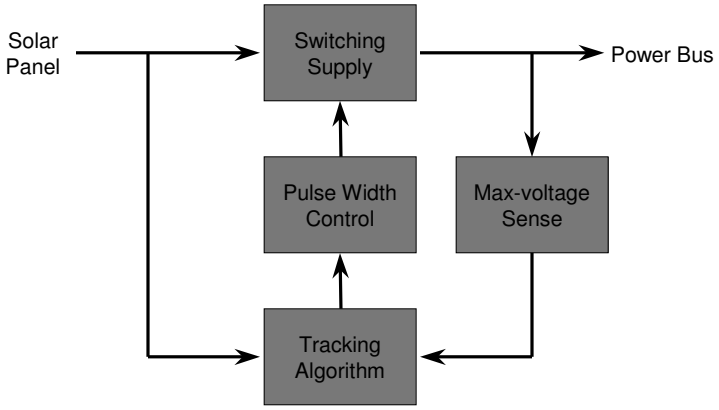

Power System - Block Diagram

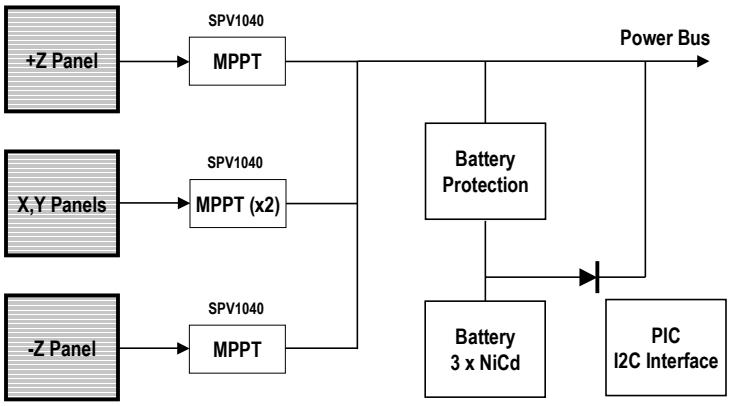

Power System - Battery

- 3 x NiCad cells
- 3.6 V nominal
- 10 watt-hours
- 10% depth of discharge
- Charge: 0 to +45 C
- Discharge: -20 to +60 C

DC Power Available

- 1.9 watts min in sunlight (no battery)
- 2.2 watts average (max eclipse)
- 2.8 watts average (no eclipse)
- 10 watts peak power

Internal Housekeeping Unit

- Collects telemetry information
- Supports science experiment
- Sends telemetry as low speed FSK w/FEC in transponder mode
- High speed FSK w/FEC in command mode
- Executes commands from ground control

IHU Block Diagram

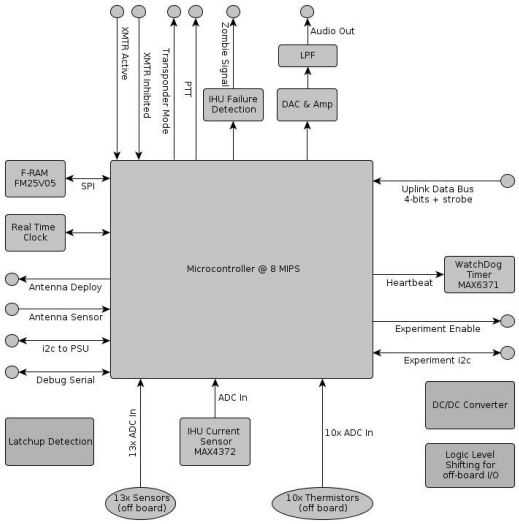

IHU Microcontroller

- STMicroelectronics STM32L151VBT6
- ARM3 Cortex CPU (32-bit)
- Up to 33 MIPS @32 MHz
- Designed for "ultra" low power consumption
- 128K FLASH program memory
- 16K RAM
- On board RTC, D/A, A/D

IHU Non-volatile FRAM Memory

Comparison of Memory Attributes

	FRAM	EEPROM	Flash
Time to write 64 bytes to memory	1.6 µs	2,200 µs	6,400 µs
Time to read 64 bytes from memory	1.6 µs	4.5 µs	4.5 µs
Number of write cycles	100 trillion	500,000	100,000
Voltage needed to write	1.5 V	10 to 14 V	10 to 14 V
Manufacturing cycle time	–	>3×	3×
Resistance to gamma radiation	Yes	No	No

For further information on Texas Instruments' FRAM technology:
www.ti.com/fram

RF System

- 70 cm FM receiver (uplink)
- 2 m FM Transmitter (downlink)
- Transponder mode provides FM repeater
- Command mode for running experiment

Transponder Mode

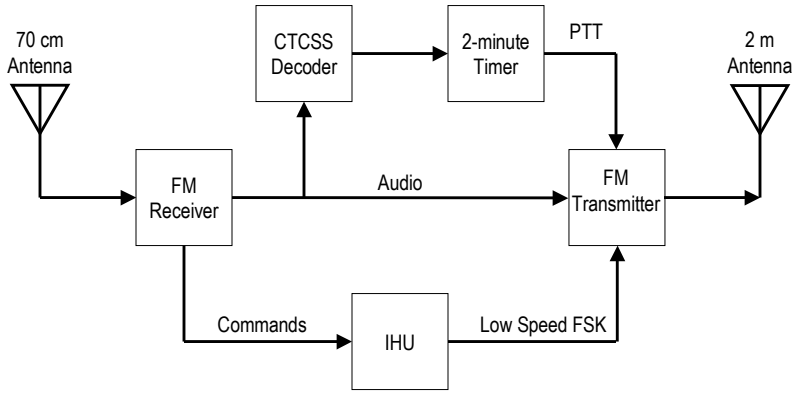

Command Mode

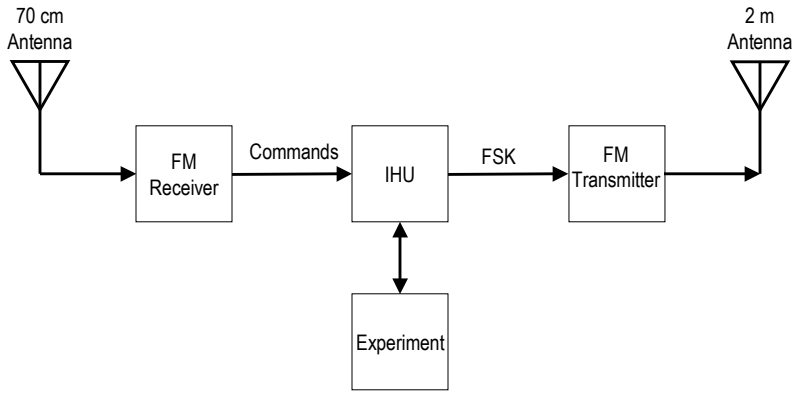

RF System Design

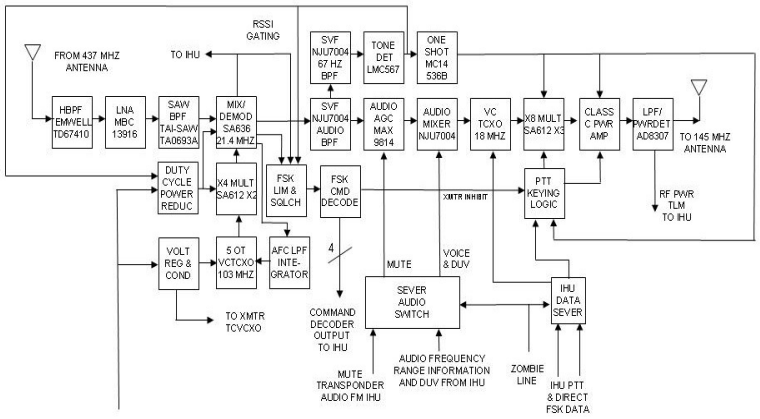

FOX 1 SATELLITE
ANALOG FM TRANSPONDER
STRAWMAN HARDWARE CONCEPT

23 SEP 2011
V1R7

RF Power Amp

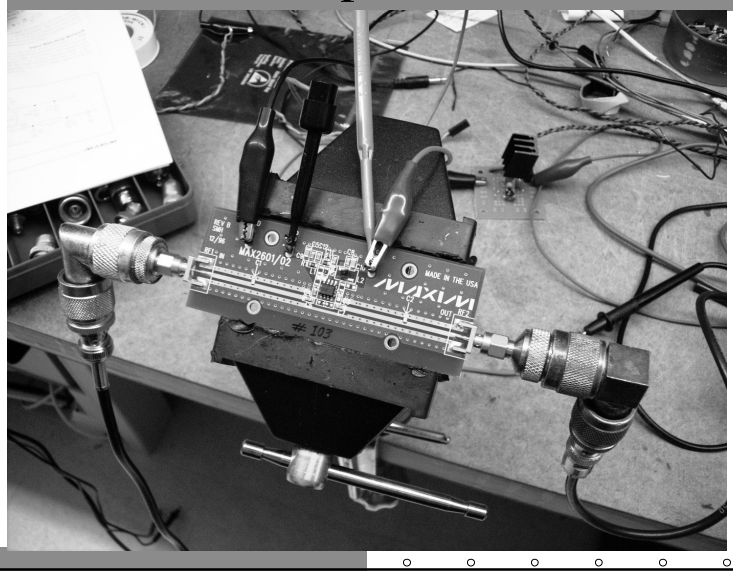

Antennas

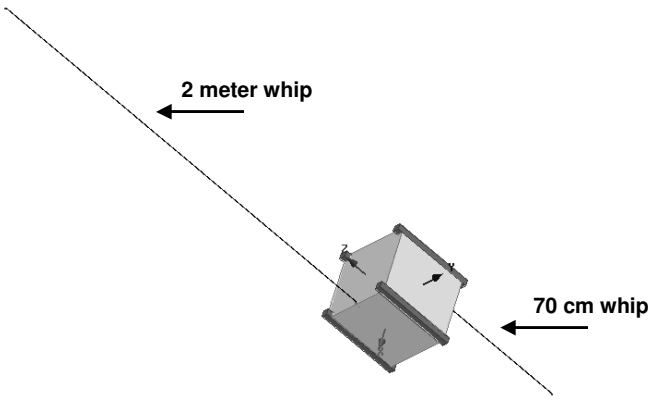

VHF Antenna Pattern

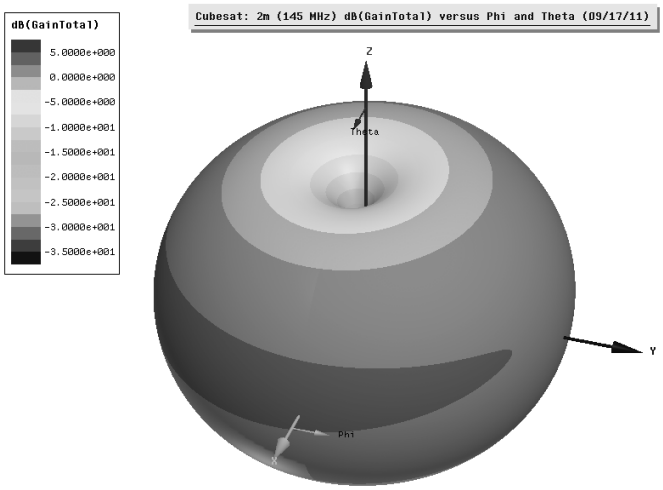

VHF Antenna SWR

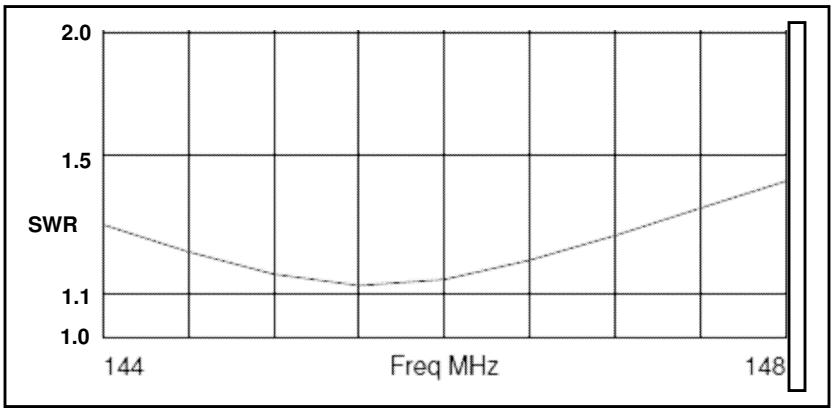

UHF Antenna Pattern

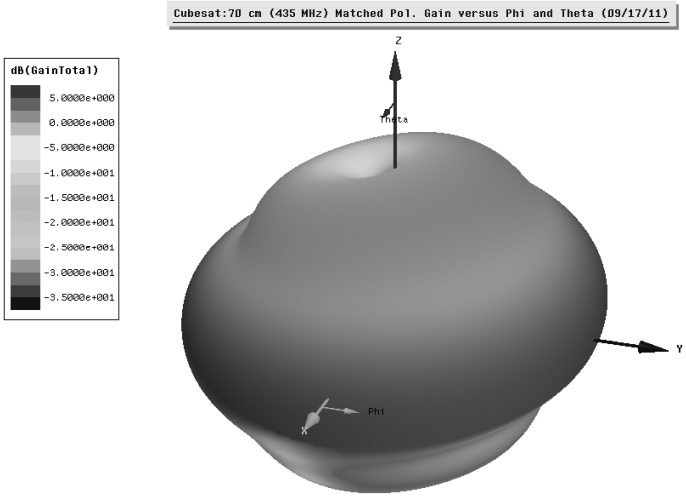

UHF Antenna SWR

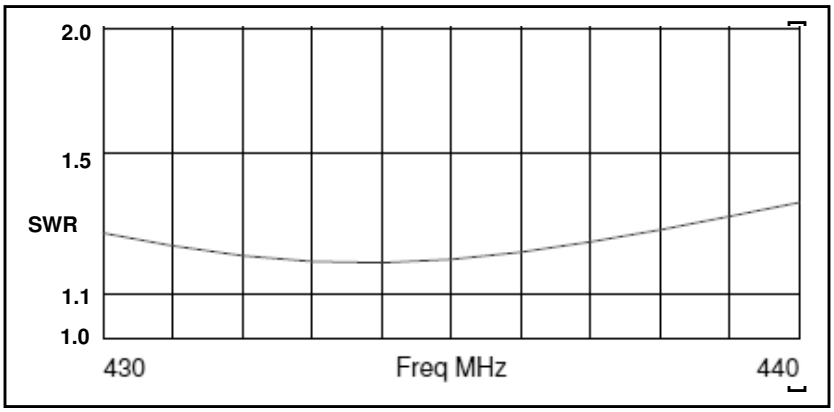

Science Experiment

- Penn State University - senior design project
- 3-axis MEMs gyro sensor
- Measures satellite spin rate, spin direction and wobble about the magnetic axis in orbit
- May include GPS receiver

Fox-1 Team

Developers

First	Last	Call	Area
Joseph	Ambruster	KJ4JIO	Assembly / Ground SW
John	Battle	N4OE	RF Card
Steve	Bible	N7HPR	RF Card
Alan	Biddle	WA4SCA	Radiation
Jonathan	Brandenburg	KF5IDY	Software
Larry	Brown	W7LB	Model Program
Jerry	Buxton	N0JY	Systems Engineering
Steve	Christie		Mechanical
Don	Corrington	AK2S	Test
Bob	Davis	KF4KSS	Mechanical
Burns	Fisher	W2BFJ	Software
Joe	Fitzgerald	KM1P	Software
Bdale	Garbee	KB0G	IHU Card
Braddock	Gaskill	W3BCV	IHU Card
Alex	Harvilchuck	N3NP	University experiment
Dick	Jansson	KD1K	Thermal
Jim	Johns	KA0IQT	Software
Phil	Karn	KA9Q	Software
John	Klingelhoeffer	WB4LNM	RF Card
Bryan	Klofas	KF6ZEO	Systems Engineering
Dave	Mynatt	KA0SWT	Assembly
Keith	Packard	KD7SQG	IHU Card
David	Ping	WB6DP	Antennas
Douglas	Quagliana	KA2UPW	Batteries / Ground SW
Mike	Radwick	N8XKZ	Software
Bill	Reed	NX5R	Software
Jay	Schwartz	WB8SBI	Software
Bob	Schwerdlin	WG9L	Mechanical
Ron	Tassi	N3AEA	Power System
Jerry	Zdenek	N9YTK	IHU Card/Power System

Advisors

First	Last	Call	Area
Keith	Baker	KB1SF	Project Management
Tom	Clark	K3IO	Technical Advisor
Andrew	Glasbrenner	KO4MA	VP Operations
Chuck	Green	N0ADI	Electronic hardware
Lou	McFadin	W5DID	HW Mgr, ARISS
Bob	McGwier	N4HY	Technical Advisor
Stan	Wood	WA4NFY	Antennas

AMSAT Fox

Logo by Steve Kenwolf

Sound Like Fun?

- AMSAT is always hiring!
- Engineering: mechanical, electrical, systems, software, project management
- Satellite construction: PCB layout, parts procurement, surface mount construction, parts machining, testing

Contact Tony Monteiro, aa2tx@amsat.org

Any Questions?

AMSAT Engineering Team

2011 Space Symposium

Fox-1 Thermal Design

Presented by

Dick Jansson, KD1K

Abstract

The very dramatic reduction on the size of electronics and their concurrent increase in complexity and capability are making possible multi-function satellites in very small volumes. The CubeSat program was born as this complex electronic environment was birthing. CubeSat is a small, 10cm cube 1/12 the volume of the previous "small" AMSAT Microsat program of 1990. Owing to the small size and mass it has become financially possible to launch these satellites on small budgets. AMSAT is now in the process of exploring this field and size of satellites as finding launches for our previous designs has become nearly impossible.

While the size of these satellites has been reduced, the complexity of the thermal design and the supporting analyses has not really diminished at all. This paper will document the thermal design and analyses of the AMSAT Fox-1 program.

About the Author

Dick Jansson, KD1K (ex: WD4FAB), holds AMSAT and ARRL life memberships. He resides in Winter Park, Florida.

Dick has been participating in the thermal and mechanical designs of AMSAT satellites since 1978 starting with the late lamented Phase 3A; then to Phase 3B – AO-10; and to Phase 3C – AO-13. He conducted a study effort in the Geosynchronous Phase 4 effort before working feverishly on the Microsat Program culminating in 1990 with the quad launch of AO-16, DO-17, LO-18, and WO-19. Attention was almost immediately then turned to the Phase 3D program resulting in the AO-40 satellite. In 2000 a study period commenced for a follow on in the Eagle study program which was subsequently abandoned. Other recent efforts have been dealing with ARISSat and now Fox-1.

1 Introduction

A CubeSat is a type of miniaturized satellite for space research that usually has a volume of one liter, standardized as a 10x10x10cm cube, weighs no more than 1.33 kilograms, and typically uses commercial off-the-shelf electronics components. Beginning as the brainchild of Prof. Bob Twiggs, KE6QMD, AMSAT member, of Stanford University in 1999 and promulgated in conjunction with California Polytechnic State University (Cal Poly) the CubeSat specification was developed to help universities worldwide to perform space science and exploration.

The term "CubeSat" was coined to denote nano-satellites that adhere to the standards described in the CubeSat design specification. Cal Poly published the standard in an effort led by aerospace engineering professor Jordi Puig-Suari. The specification does not apply to other cube-like nano-satellites such as the NASA "MEPSI" nano-satellite, which is slightly larger than a CubeSat. AMSAT has evolved its own initial specification based on the Cal Poly document.[i] This AMSAT document is ITAR controlled and is not a generic CubeSat document.

With their relatively small size, CubeSats could each be made and launched for a 2013 estimated cost of under $100,000 to LEO for a 1U model. This price tag, far lower than most satellite launches, has made CubeSat a viable option for schools and universities across the world. Because of this, a large number of universities and some companies and government organizations around the world are developing CubeSats — between 40 and 50 universities were developing CubeSats in 2004, Cal Poly reported.

This paper will examine the thermal environment of a CubeSat and its thermal design to insure workable temperatures for the spacecraft electronics.

2 Mechanical Arrangement

From a thermal standpoint the only part of the AMSAT specification that is of thermal design interest is that of the operating temperature: -40°C to +50°C. While this seems a bit stringent, one of the goals of this thermal design effort is to provide more suitable arm-chair conditions for the installed equipment in Fox-1.

The Fox-1 external mechanical arrangements are shown in Figure 1. This structure is covered on all six sides with solar panels, each composed of two large UTJ solar cells of ≈28% efficiency. The operational electronics Printed Circuit Boards [PCB] are arranged in a stack, Figure 2 that is located in the central portion of the spaceframe, Figure 3, providing a centralized placement for the battery mass. This arrangement is to comply with the requirements that the Center Of Mass [COM] is within 2cm of the geometric center of the allocated volume for the spacecraft.

Panels on the sides of a CubeSat are allowed to protrude up to 6.3mm in certain proscribed areas of each side. The outer 8.5mm of each side of the spaceframe is reserved for a ***Rail***, running in the Z direction, reserved for the launch system, with proscribed finish and aluminum oxide coating. The AMSAT design sets aside 10.0mm for each rail. That, then, allows for an 80x100mm PCB-based solar panels on the X and Y sides and a nominal 100x100mm solar panel PCB on the Z sides. These Z-side dimensions seemingly imply space left over on the Z panels but there are other functions that must be ac-

commodated in that space, such as the separation switch, separation pads and their push-off springs, and U and V band antennas. With all of these functions using spacecraft external area, there is just no room left over for any kind of thermal control surfaces. Essentially the entire spacecraft surface is spoken for and with materials with preset radiative properties.

While it appears that there is room left over on the solar panel PCB, the high-efficiency triple-junction solar cells shown are the largest practical at 68.9x39.5mm. Manufacturer's catalogs show some larger cells that would more adequate fill this PCB area, but those cells are not really a standard product and would be very costly to purchase and implement in this design.

3 Heat Sources

By far the single most profound heat source for a spacecraft is the Sun, providing a 6000K radiant heat source of from a distance of 149Mkm (1 AU). As such it provides heating in the visible and near infrared spectrum, 0.3μm to (about) 4 μm. The response of materials to this radiant source is measured in terms of their non-dimensional Solar Absorptance, α_S property. The α_S is in deference to a material's radiation response to radiation in the far infrared, in the range of 4.0 μm to 25 μm, called the Emittance, or ε_{IR} property. Compounding the solar heating issue is the fact that there are a range of values of the solar "constant", going from a "cool" sun, at 0.13081W/cm^2, to a "warm" sun, at 0.13995W/cm^2. A nominal value of solar heating of 0.13660W/cm^2 is often used.

A second heat source to a spacecraft is that of the reflected solar radiation from the illuminated side of the earth, called Albedo with maximum values ranging from 0.05516W/cm^2 to 0.03530W/cm^2. Spacecraft surfaces respond to lower heating values of albedo radiation in the same manner as to solar radiation. Albedo radiation is a property that must not be ignored as it can be very useful to a spacecraft. Albedo radiation is an orbital geometric heating property that depends where a spacecraft is located over the solar illuminated side of the earth and the orbital altitude.

The third radiant heat source for a satellite, especially for those in Low Earth Orbit, or LEO, is that of the planetary far infrared emission. The earth is a heat source of approximately 290K providing far infrared heating values of 0.01891W/cm^2 to 0.02616W/cm^2. The amount of this radiant source is pretty much a constant value for a satellite in circular orbit but is a changing value for satellites in elliptical orbit owing to the pure geometry of how much of the 4π steradian, sr, of the solid spherical angle of space sphere around a satellite is filled by the earth. For satellites in High Elliptical Orbit, HEO, the planetary emission heating value is generally so small that is ignored.

The fourth heat source for a satellite is that of internal dissipation of the electronics. This depends upon how much of the incident solar, and albedo radiation is converted to electrical power then consumed, dissipated, by the electronics and thence converted to heat. In many satellites the electrical dissipation is often considered a nuisance but in Fox-1it may turn out to be a beneficial property.

4 Heat Sinks

To get rid of the heating caused by the above noted sources requires a heat sink. The ultimate heat sink for a satellite is that of radiation to the “cold black space” envelop surrounding the structure. In reality the space heat sink is not at absolute zero, but actually at about 4 Kelvin. From a thermal standpoint of a satellite operating from 250 to 310 Kelvin there is not much difference in the space heat sink from 0 Kelvin, thus the 4 Kelvin is commonly ignored.

Internally in the Fox-1spacecraft the effective heat sink (by conduction and radiation) for the electronics is the spaceframe. I shall not qualify this situation further until I get into the discussion of the thermal design as there are some things that are different in Fox-1than I have seen in any of our prior AMSAT spacecraft.

5 Thermal Control Methods

All spacecraft temperatures are controlled by the nature of their external coatings. The values of absorptance, α_S and emittance, ε_{IR} are very important and are determined by careful measurement. Most materials have been so characterized and books have been written to document these properties. Prior to the advent of our interest in spaceflight, such documentation was generally not very well understood or documented. Sixty years ago in colleges and universities the Heat Transfer courses generally only gave passing interest to the issues of radiant heat transfer. These days such oversight cannot be tolerated for aspiring satellite engineers.

In most spacecraft programs a great effort is expended to insure that the coatings, both inside and outside the spacecraft, are well understood. In fact substantial control of the temperatures of a spacecraft can be achieved by such methods as the use of Multi-Layer Insulation, MLI; or solar absorbing coatings, generally metallic films; or solar reflecting coatings, such as second-surface mirrors of quartz or particular types of Teflon. Internally material coatings also play a part in the control of electronic box temperatures.

In the case of the Fox-1spacecraft we do not have any liberties in adjusting the external coatings as the spaceframe size and features precludes any specific area for the use of thermal control materials. The eight 10x100mm rail surfaces must have a specified finish and aluminum oxide coating while the remainder of the area is spoken for by the solar cells and their PCB mounting boards. These surface properties are what they are and there is no real latitude for any adjustments. This is a situation that I have not heretofore seen or had to work with as it places some rather serious restraints on the thermal design (sadly taking matters out of the hands of the designer).

As will be seen, the temperature variations of the spaceframe are substantial. Normally electronic modules or, in the case of Fox, just PCBs are mounted directly to the spaceframe. If that is done, as has been done in the past, the PCB temperature variations would also be substantial along with the spaceframe. These temperatures are somewhat in excess, both too warm and too cold, of what would be desirable for the electronics and so steps need to be taken to alleviate this situation if possible.

Other factors noted in dealing with the electronic PCBs is that we have electronic functions on a single small PCB that in the past required a whole sizable module to accom-

plish. In addition the power dissipation of the whole spacecraft is at the most a very few watts. To combat the spacecraft temperature variations, as reflected in the PCB temperatures, the mounting of the PCBs will provide a conductive coupling of the boards together as a stack as shown in Figure 2 and then provide as much thermal isolation of this stack from the spaceframe as possible, through the use of Delrin plastic mounting blocks, so that the limited power dissipation of this PCB stack can be used for self-heating to provide a more benign temperature environment. This has been seen analytically and needs to be capitalized for the flight hardware. This whole process needs to be approached carefully. This process affects a number of factors, such as: PCB size; PCB stack assembly; PCB stack mounting to the spaceframe; and the PCB stack radiant heat transfer to the interior of the spaceframe.

6 Analytic Methods

The first steps of building, or composing, a thermal analytic model is to create a numeric geometric model for radiation analysis, both for internal spaceframe radiation and for the external orbital heating from the sun and earth. Creating the required numeric model calls for a close look at the mechanical design such as shown in Figures 1-3. For Fox-1 we see that it is composed of a collection of flat plates whose geometry can be numerically described and located in the relative spacecraft coordinate system. The spacecraft can then be geometrically located in the orbital coordinate system.

For this radiation analysis effort we employ a suite of Monte-Carlo ray tracing analysis software contained in a package called NEVADA. For the internal radiation evaluation RENO software is used to report the radiant interchange factors while for the orbital heating of the solar radiation and earth emissions, VEGAS software is used. Both of these programs use the same, or similar, input files. Models can be assembled using somewhat expensive automated software, but we have felt that these steps are not needed. Most automated programs create rather large and highly detailed models that have much more complexity than is justified by the thermal needs of the structure. These programs provide output files that are used directly with the SINDA thermal analyzer, or with further text editing to create the needed files.

For the thermal analysis proper a different numeric model is created for use with the SINDA/G package. The spaceframe is composed of a description of the spacecraft surfaces as nodes with thermal conductors (either by thermal conduction or radiation) linking those nodes. Creating this type of model of a spacecraft greatly depends upon the experience of the analyst to insure that a meaningful model is assembled but one that is not so complex that it cannot be understood. Highly detailed models can be created but that added detail is of little value as there is, generally, little interest or value in knowing the temperature gradient across a surface. You can see that the KISS principle is at work here.

These software packages are not recommended for the uninitiated to use as I have found, even with many years (≈50) using them, which I have had to discover new features, capabilities and ways of doing things.

7 Data Handling

In the process of understanding the output data of this analytic effort, a series of Microsoft Excel spreadsheets (SS) were created. Such a tool has been shown to be needed to make sense of handling a large amount of output data. Despite the relative simplicity of the thermal analytic model there is a need to be able to clearly understand these results and to portray the results in a manner that allows the engineer to understand how model variations affect the end results.

This effort evolved further with an expansion of the SS that incorporated the input files for VEGAS and SINDA as well as their output files. This SS tool has helped us understand and document the analytic work flow and the overall analytic effort immensely. The expanded SS have also greatly helped by reducing the amount of manual labor in the extensive text editing needed in certain areas of the thermal analytic effort, as well as incorporating the very useful graphical presentations of output data. The SS effort has also made possible an understanding of how satellite motions can be modeled in the desired tumble motions and to properly code those into the VEGAS input file.

8 Analytic Results

The available spreadsheet results are usefully expressed in several charts to illustrate the Fox-1temperatures and incident and solar cell generated power levels. Other papers will be used to discuss the power results as that subject will require some close attention to illustrate those issues. This paper will only discuss the satellite thermal performance and the resulting temperatures. This task is not as simple as it may seem as we have run analyses for many situations of orbital orientation, “warm sun and “cool sun” heating values and satellite orientation. This has resulted in quite a few models that were used to examine the boundaries of spacecraft operation. Providing just a couple of snapshot view of this data in this paper does not reflect all of the work done.

A further consideration is the modeling of electronic power dissipations of PCBs that have yet to be designed. These dissipations can then be considered as educated targets for the thermal model and the electronic designers both. The target for the average spacecraft power dissipation is to not exceed the minimum power generation of about 2.1W. For that this thermal model used the following numbers for the PCB dissipations: RF: 0.65W (for a 0.40W RF output for a total consumption of 1.05W); Power board, PCU: 0.23W; IHU: 0.10W; Memory (TBD): 0.01W; Experiment (TBD): 0.70W. For the thermal model operation the experiment PCB was not active.

Early on in this effort it was realized that nominally connecting the PCBs to the spaceframe could bring some extreme, and undesirable, temperatures to the electronics. This resulted in assembling, in the thermal model, a conductive stack assembly of the PCBs, (but not including the “experiment” PCB, at this time, owing to its separation from the other boards.) This resulted in a moderation of the spaceframe temperature effects on the PCB temperatures. These results are shown in Figure 4, illustrating that PCB self heated temperatures ranged from about -20°C to +3°C. These temperatures are still a bit far from the desired values. Obtaining the desired Spacecraft motions has been a concern,

but Figure 5 not only shows the power generation values but clearly illustrates the desired spacecraft motions.

Efforts were then undertaken to determine the possibilities of improving the thermal isolation of the PCB stack from the substantial temperature variations of the spaceframe. Figure 6 shows the result of this effort for a 33% eclipse orbit and resulting in PCB temperatures ranging from +12°C to +19°C, a significant moderation from the temperatures of Figure 4. Similar results are seen in Figure 7 for a full-sun orbit with the PCB stack running from +10°C to +13°C. The power generation picture for the full-sun orbit is shown in Figure 8.

9 Future Work

The analytic results shown to date have promise for being able to offer a modest temperature environment for the spacecraft electronics. Along the way, a very capable set of analytic tools have been created to speed up the process of creating these analyses. It is clear that more work is needed before creating flight hardware. The added work needed will be discussed below.

Sensitivity studies need to be conducted to determine the boundary conditions for the radiation heat transfer conditions inside the spaceframe. Such questions come to mind as to how much effect is to be seen from providing a practical low emittance environment around the PCB stack?

Another issue that needs attention is that of the PCB dissipations. We have used one nominal set of estimated power values that may not like the final values. Clearly the spacecraft must be able to operate within the boundaries of the available power generation. Having the high efficiency UTJ solar cells has made CubeSats possible in the first place, but that power is still highly limited and must be employed wisely.

The Fox-1program so far has been aimed toward the Fox-1 mission, with a relatively simple set of electronics and with no deployable solar panels. For the future, however, we will be aiming for Fox2 with its increased complexity and capability. Fox-2 will need to have deployable solar panels so as to provide the needed power for the electronic payload.

One issue that has not been addressed is the variable power consumption than may be needed for different parts of an orbit as in eclipse. The transmitter may need to be placed in a low power mode at those times owing to the unavailability of solar power.

Another modeling variable is that not all of the solar power may be needed for the whole orbit, yet our current models unrealistically uses all of the power all the time that it is available. This modeling issue was addressed more than twenty years ago in the Microsat program. This FORTRAN code, which is still available, removed the rated generated power from the solar panels, operated the necessary equipment and charged the battery until its rated energy is stored and then, with less than full power needed from the panels, lowered the power removed from the solar panels, effectively adding heat to those panels. Battery stored energy was removed as needed during eclipse. This code dynamically models the complete energy balance of the satellite.

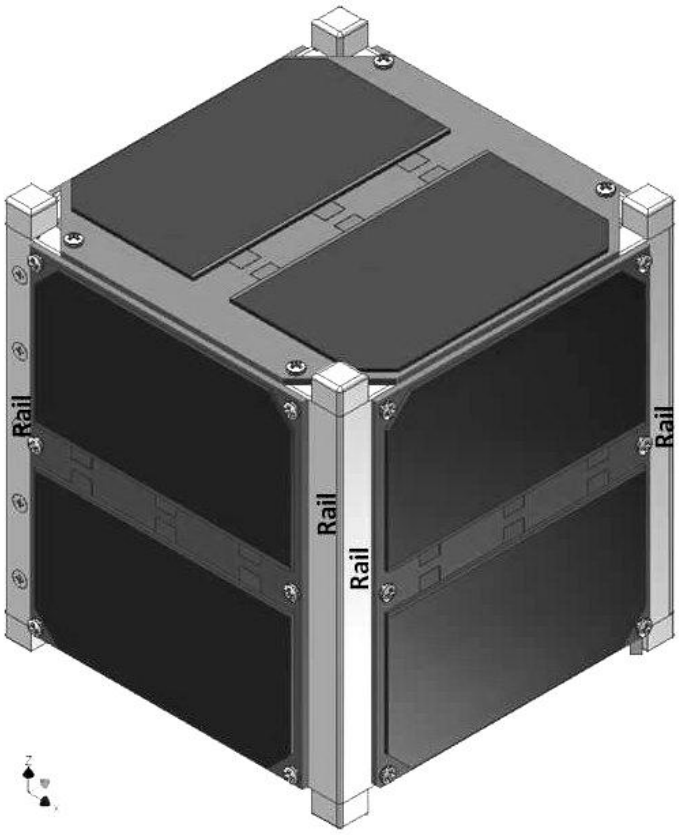

Figure 1 Fox-1 spaceframe assembly.

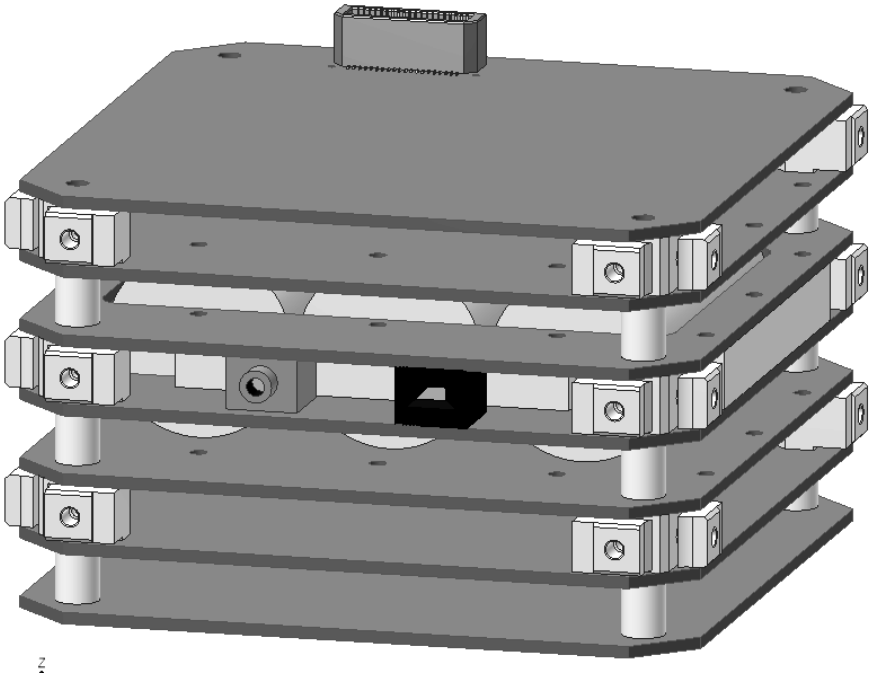

Figure 2 Fox-1 PCB Stack showing the battery cells in the center.

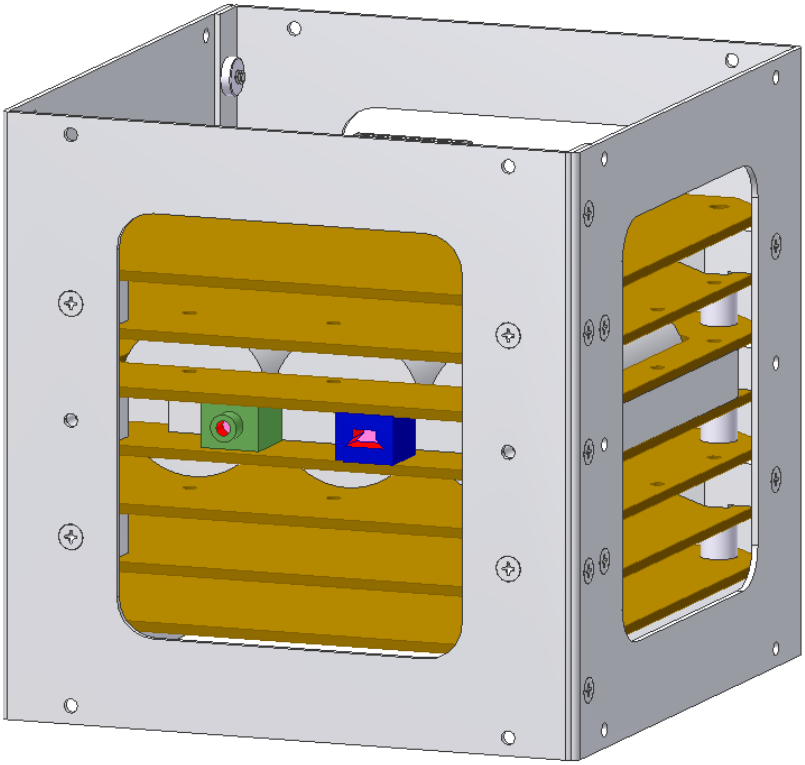

Figure 3 Fox-1 bare spaceframe with centrally mounted PCB stack.

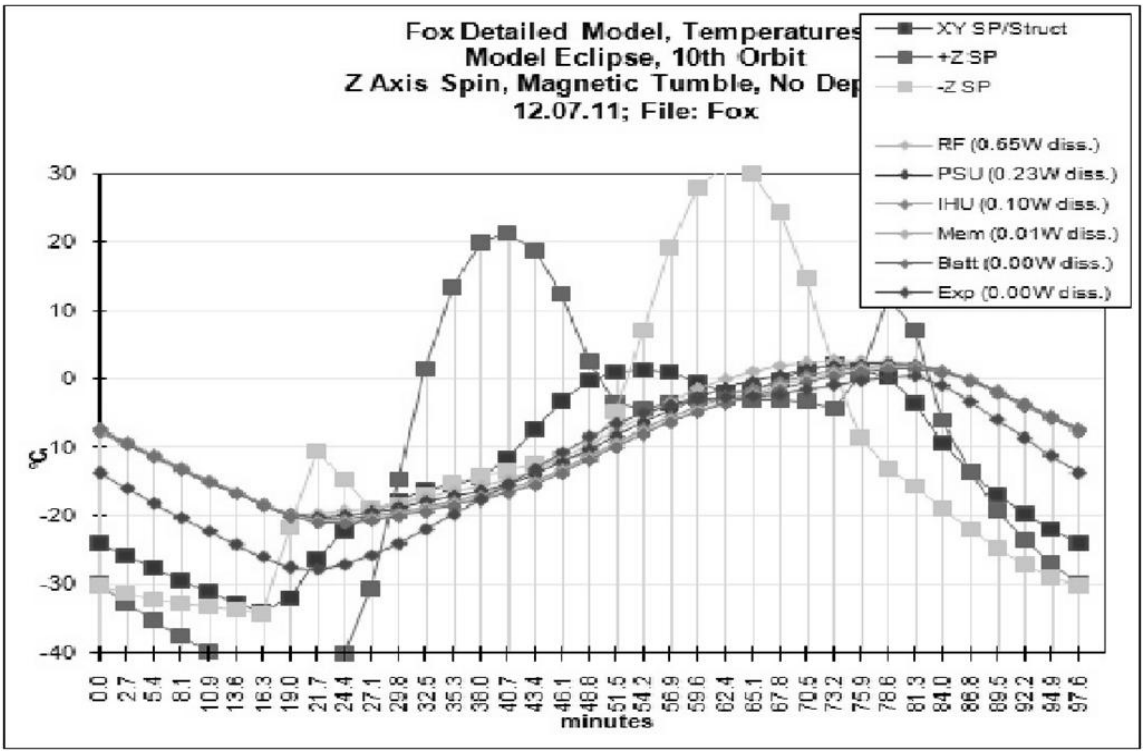

Figure 4 Fox-1 temperatures for maximum eclipse orbit with sun in the orbit plane.

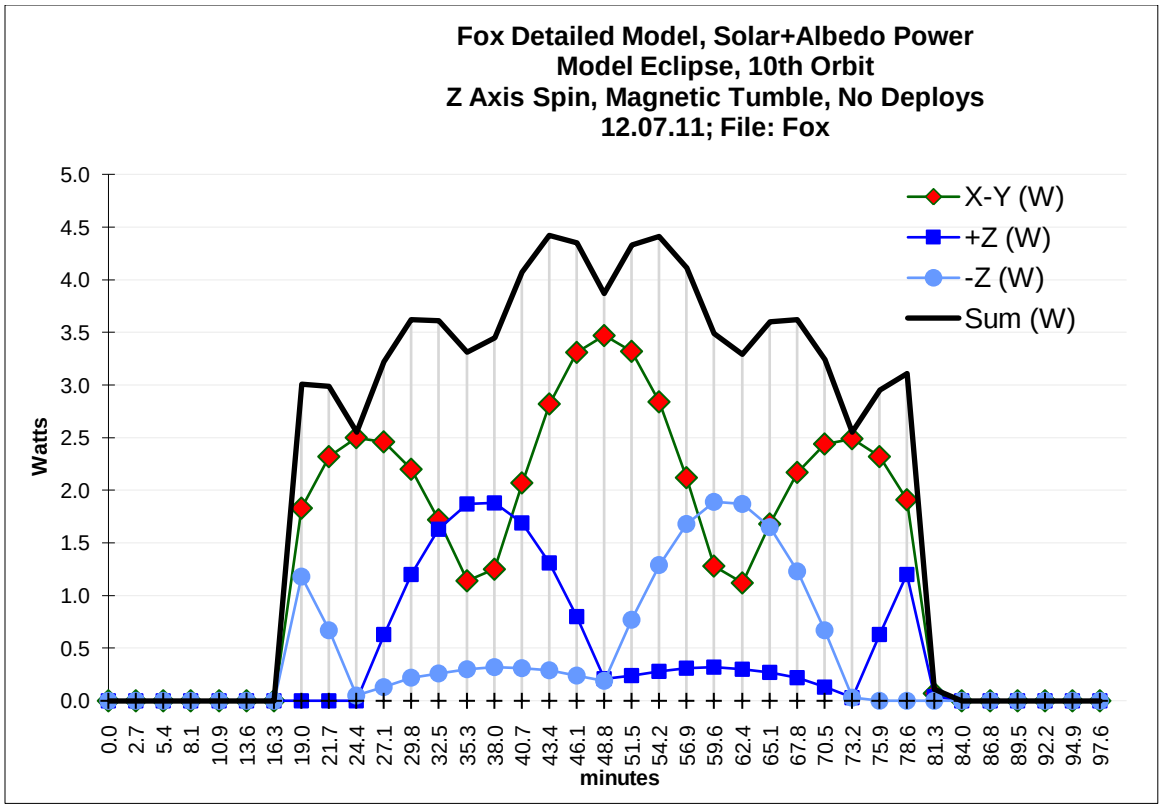

Figure 5 Fox-1 power generation for maximum eclipse illustrating spacecraft motions.

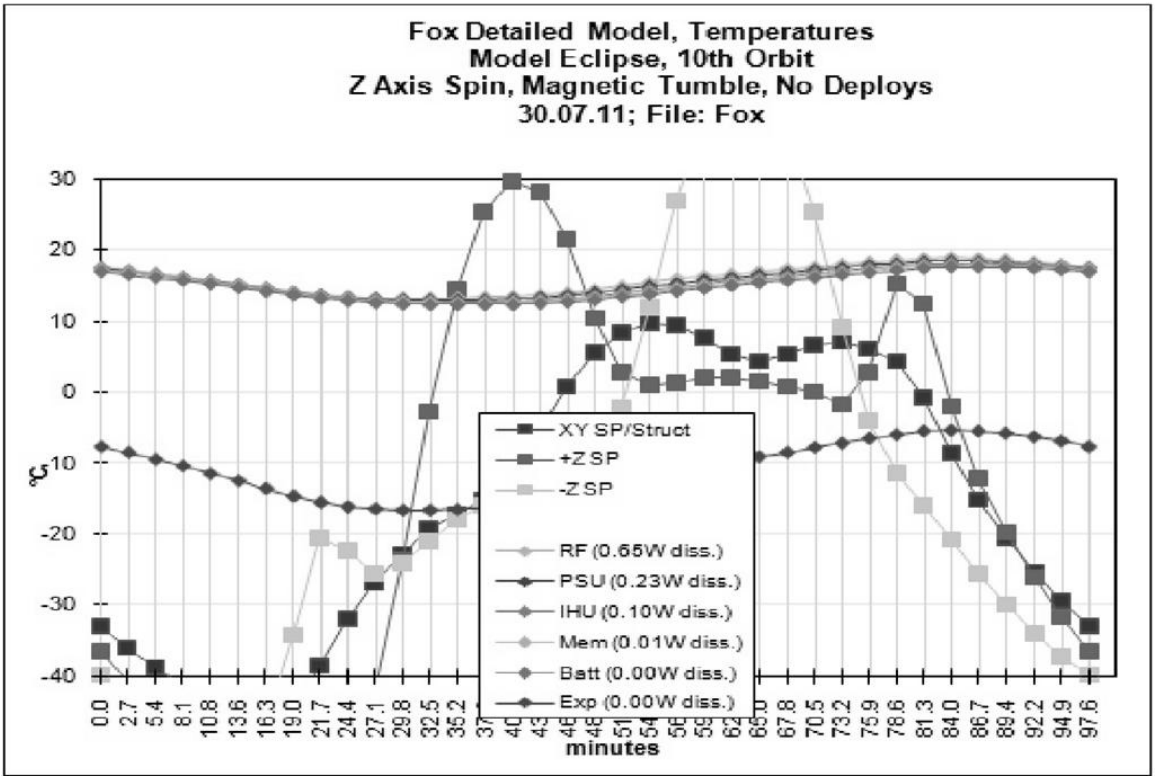

Figure 6 Fox-1 temperatures illustrating thermally isolated electronic temperatures.

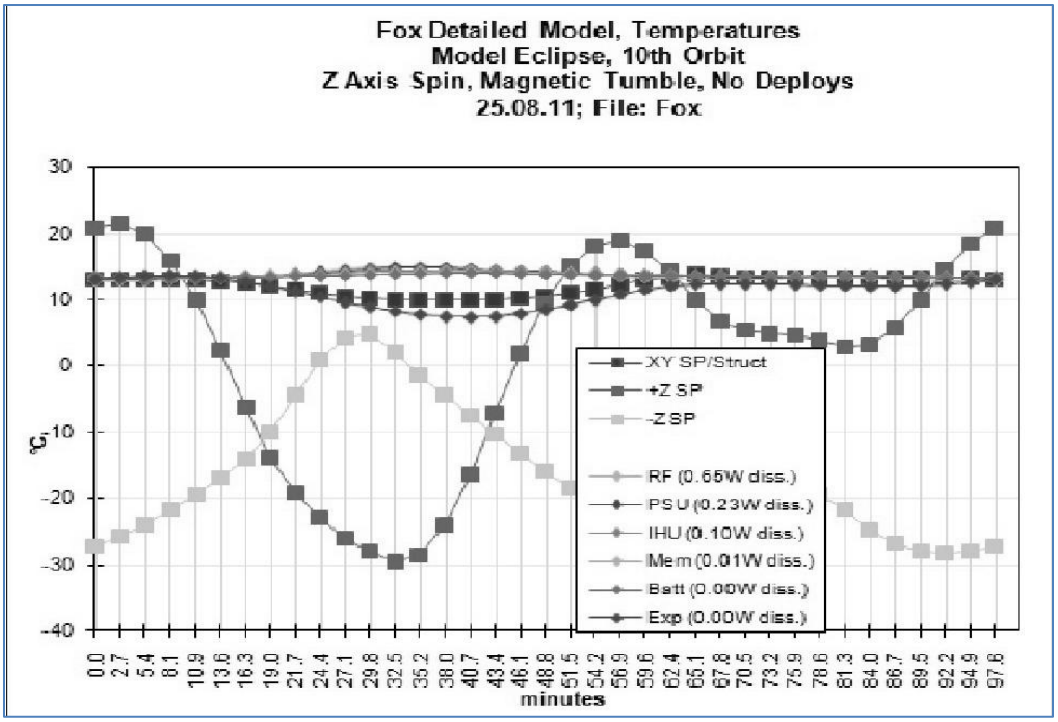

Figure 7 Fox-1 temperatures for full sun orbit with thermally isolated electronics.

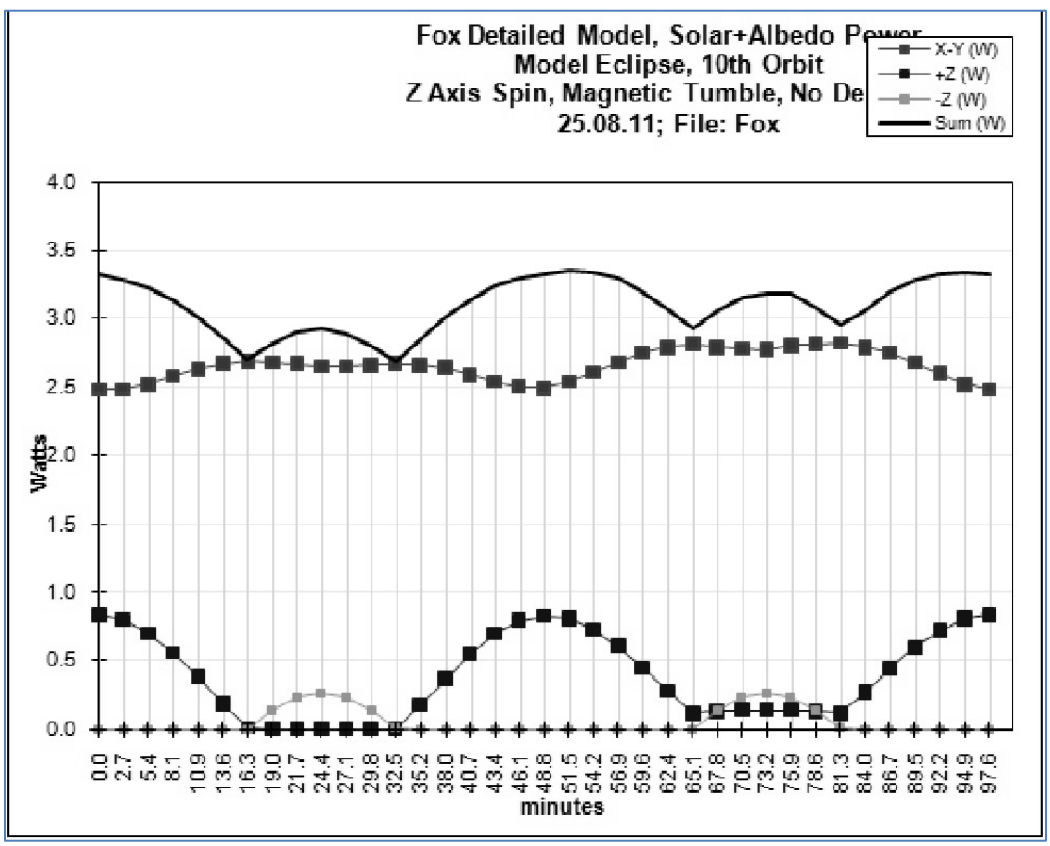

Figure 8 Fox-1 power generation for full sun orbit.

[i] **AMSAT *Fox* - System Requirements**, Version 1.0, dated 31 January 2011.

Fox CubeSat Mechanical Design

Robert Davis KF4KSS

Abstract

Fox 1 will be AMSAT's first 1U CubeSat, 100x100x100 mm (about 4x4x4 inches) and up to 1.33 kg (about 2.9 pounds). Fox 1 mechanical design is to be fully designed and flight units built by the end of 2012. Fox 2, a follow-on, may take longer to develop in parallel, and must have additional deployable solar panels, but otherwise should be as identical as practical.

This paper describes some of the major trades and features of the mechanical design.

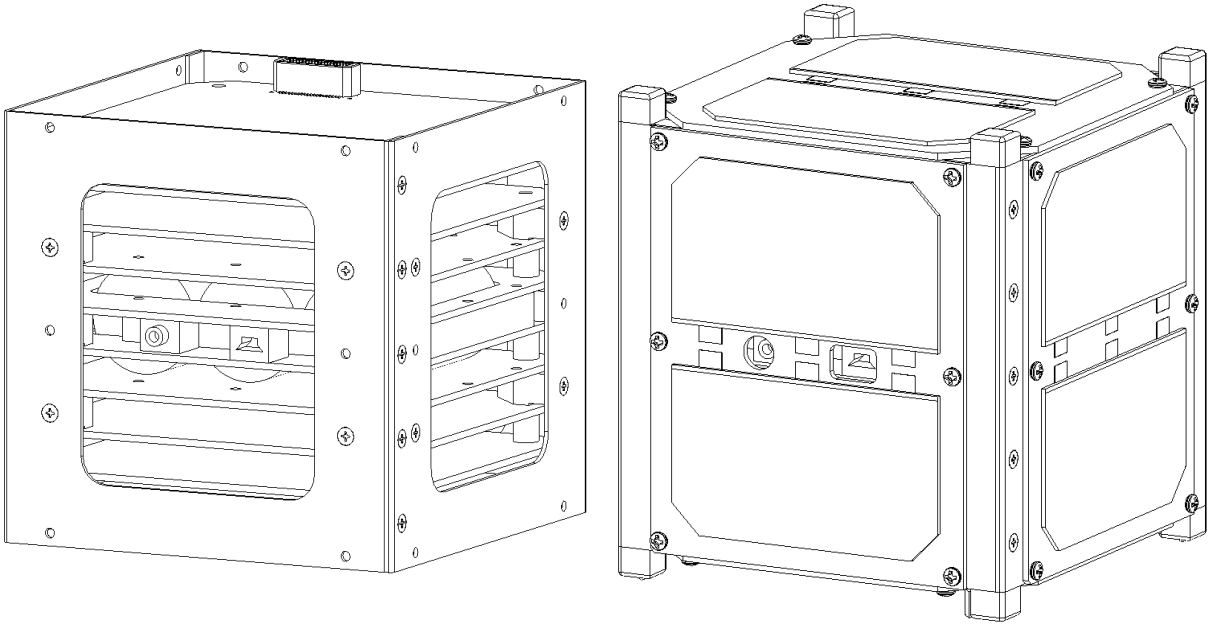

Figure 1 (a) PCBs inside structure **(b) Fox 1 lacking only antennas**

Requirements

CubeSat basic requirements are defined in the CubeSat Design Specification (CDS), available from the California Polytechnic State University, San Luis Obispo. It should be noted that volume 6.5 mm thick is available for solar panels outside the simplified volume of 100x100x100 mm. The Rails, the four edges that slide inside against the contact surfaces inside the PPOD, are 113.5 mm long to allow 6.5 mm envelope top and bottom of the CubeSat, along with a 0.5 mm gap between solar panels of neighboring CubeSats.

Fox 1 will also be proposed in response to the Announcement of Opportunity for the CubeSat Launch Initiative, a NASA program to demonstrate CubeSat launch services. This also imposes additional requirements, per LSP-REQ-317.01, available from NASA KSC. Cal Poly, NASA and other entities are acting as launch integrators. Launch vehicle selection may occur very late in the project, so some details are conservatively over designed and some test levels will be identified later.

It is always desirable that the mechanical design maximize power generation and accommodation of avionics and experiments. This implies that structure should be efficient in volume and mass.

For mission design, it shall spin about the Z axis, which dictates general antenna placement, permanent magnet orientation, and Z axis should be the principle inertial axis.

First Major Trade – Solar Panels

The first major trade to be completed was related to the solar panels: survey available cells, possible arrangements of cells, the incident power of a basic CubeSat, and investigate the additional incident power available with deployable panels. This occurred in several stages of increasing accuracy.

Many deployed shapes were initially compared using crude estimates of normalized average incident power. This was a relative comparison of light hitting panels, and did not yet consider power system inefficiencies or eclipse duration. Each un-shadowed panel counts as “1” when facing the sun, but some panels are partially shadowed and don’t reach their full potential. When randomly tumbled without being shadowed, it generates 0.25x since sometimes it is pointing away from the sun.

Example:
If each panel of Case 1 produces 2 Watts max, then the tumbling CubeSat would produce
1.5 (bolded in box) x 2 Watts = 3.0 Watts average.

Case 1 can be a basic CubeSat, or the stowed configuration of most other cases.

See configurations in Figure 2 and Figure 3.
Excuse the eye chart, but some values aren’t so critical anymore. A double pendulum deployable solar panel is not being considered at this time.

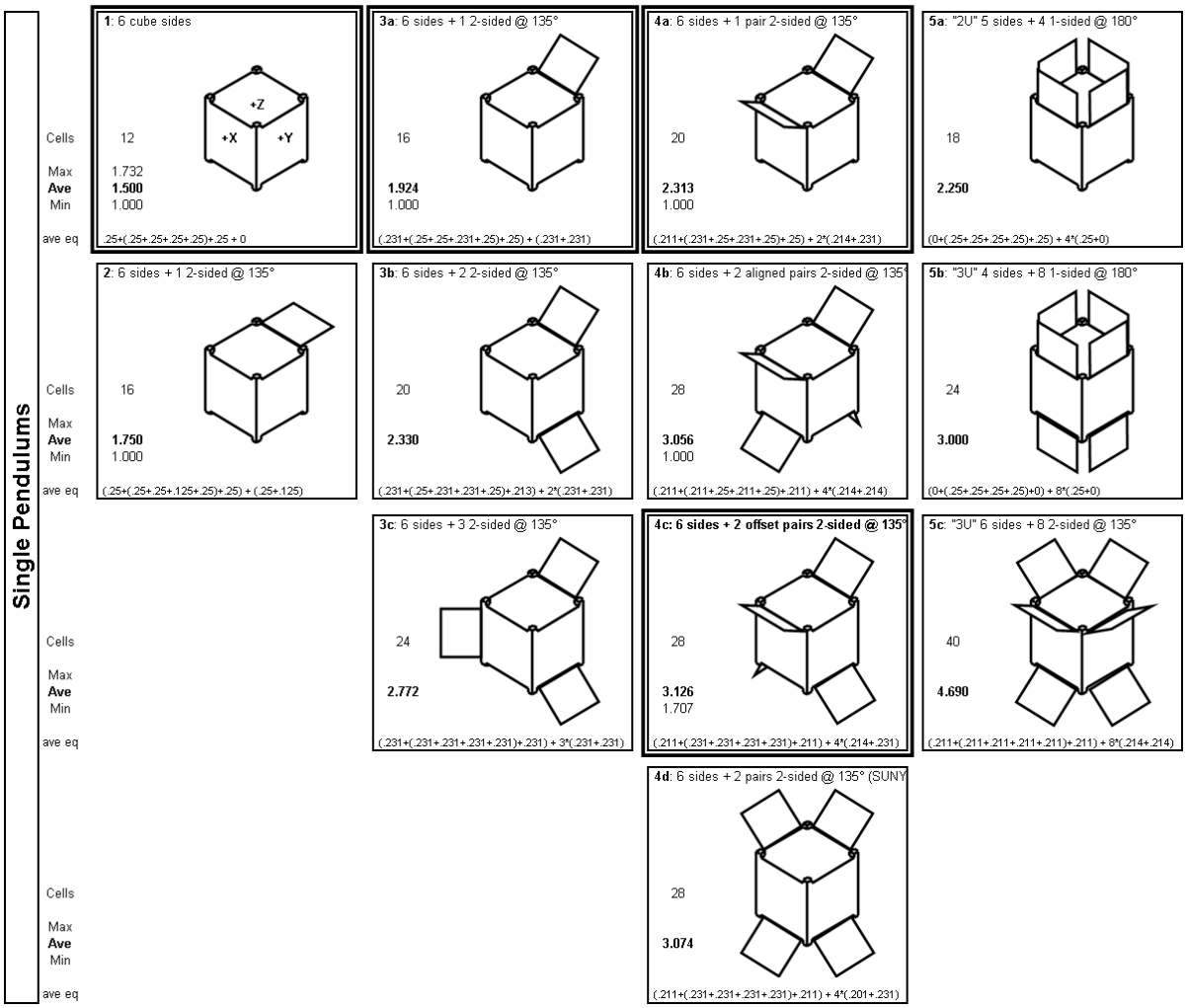

Figure 2 Single-hinge panels in first crude analysis

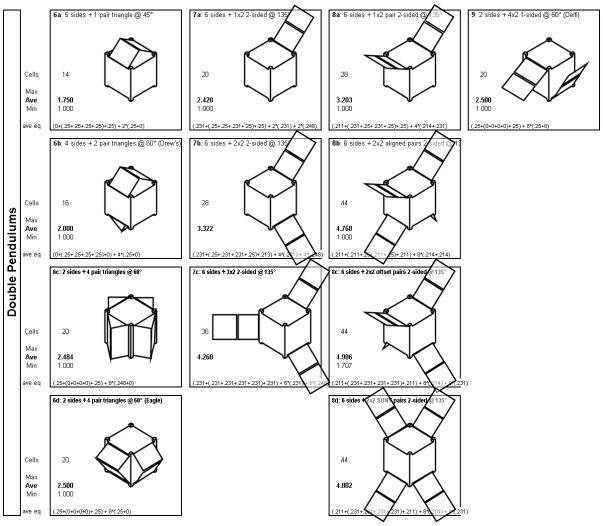

Figure 3 Double-hinges in first crude analysis

The shapes with "biggest bang for the buck" were better characterized in stowed and deployed configurations, using Beginning of Life (BOL) and End of Life (EOL) performance, for three available solar cells. It was initially thought that the deployable solar panels would fly as an experiment. Therefore one, two or four panels were compared against the cost of three available solar cells. See Figure 4 for power/cost grid.

This more detailed analysis introduced max eclipse duration based on orbit altitude, distribution of incident sun angles based on magnetic tumble in polar orbit, and entry of estimates for power system inefficiencies. This allows calculation of approximate average power delivered to the spacecraft bus, rather than simply incident power on panels. See Figure 5 and Figure 6 for details, and Figure 7 and Figure 8 for the incident power distribution across Spin/Beta and Beta.

Summary of cell variations of Cases 1, 3a, 4a & 4c from "cubesat normalized deployment comparison.pdf"

$$\text{Power Budget (W)} \approx \frac{\text{Tumble Average Incident Power (W)}}{2}$$

"Reject" Cell: 25.0% BTJM 25.3 cm^2, 37.4x76.3 x18 crop, Emcore, $50

"Best" Spectrolab CIC: 28.3% UTJ 29.85cm^2, 43.3x76.3 x18 crop, Spectrolab, $300

"Best" Emcore CIC: 28.5% BTJ 30.6cm^2, 38.8x84.6 x15 crop, Emcore, $600

Cases / PNG filenames: C 4a — Cell choice: Case # from "... comparison.pdf"

Cell Color Legend: same as another config; average of two configs; checksum passed; checksum failed

A

Case	Hinges	Configs	Reject Cell	Spect. CIC	Emco. CIC	Tumble Ave Incident P (W)	Cell/CIC Qty	Cell/CIC Cost
		4x Sides	TRUE					
		Top/Bottom	TRUE					
		Deployables	TRUE					
		Cost ea.	$50	$300	$600			
1	0	Cube				2.59	12	$600
3a	1	Stow	12	-	-	2.59	12	$800
		Deploy	16	-	-	3.22	16	
4a	2	Stow	12	-	-	2.59	12	$1,000
		Deploy	20	-	-	3.76	20	
4c	4	Stow	12	-	-	2.59	12	$1,400
		Deploy	28	-	-	4.93	28	

B

Case	Hinges	Configs	Reject Cell	Spect. CIC	Emco. CIC	Tumble Ave Incident P (W)	Qty of Cell/CIC	Cell/CIC
		4x Sides		TRUE				
		Top/Bottom	TRUE					
		Deployables	TRUE					
		Cost ea.	$50	$300	$600			
1	0	Cube				3.32	12	$2,600
3a	1	Stow	4	8	-	3.32	12	$2,800
		Deploy	8	8	-	4.05	16	
4a	2	Stow	4	8	-	3.32	12	$3,000
		Deploy	12	8	-	4.68	20	
4c	4	Stow	4	8	-	3.32	12	$3,400
		Deploy	20	8	-	6.03	28	

C

Case	Hinges	Configs	Reject Cell	Spect. CIC	Emco. CIC	Tumble Ave Incident P (W)	Qty of Cell/CIC	Cell/CIC
		4x Sides		TRUE				
		Top/Bottom		TRUE				
		Deployables	TRUE					
		Cost ea.	$50	$300	$600			
1	0	Cube				3.46	12	$3,600
3a	1	Stow	2	10	-	3.39	12	$3,800
		Deploy	4	12	-	4.17	16	
4a	2	Stow	2	10	-	3.39	12	$4,000
		Deploy	8	12	-	4.79	20	
4c	4	Stow	4	8	-	3.32	12	$4,400
		Deploy	16	12	-	6.13	28	

D

Case	Hinges	Configs	Reject Cell	Spect. CIC	Emco. CIC	Tumble Ave Incident P (W)	Qty of Cell/CIC	Cell/CIC
		4x Sides		TRUE				
		Top/Bottom	TRUE					
		Deployables		TRUE				
		Cost ea.	$50	$300	$600			
1	0	Cube				3.32	12	$2,600
3a	1	Stow	2	10	-	3.39	12	$3,800
		Deploy	4	16	-	4.16	16	
4a	2	Stow	2	10	-	3.39	12	$5,000
		Deploy	4	16	-	4.90	20	
4c	4	Stow	-	12	-	3.46	12	$7,400
		Deploy	4	24	-	6.47	28	

E

Case	Hinges	Configs	Reject Cell	Spect. CIC	Emco. CIC	Tumble Ave Incident P (W)	Qty of Cell/CIC	Cell/CIC
		4x Sides		TRUE				
		Top/Bottom		TRUE				
		Deployables		TRUE				
		Cost ea.	$50	$300	$600			
1	0	Cube				3.46	12	$3,600
3a	1	Stow	-	12	-	3.46	12	$4,800
		Deploy	-	16	-	4.29	16	
4a	2	Stow	-	12	-	3.46	12	$6,000
		Deploy	-	20	-	5.01	20	
4c	4	Stow	-	12	-	3.46	12	$8,400
		Deploy	-	28	-	6.57	28	

F

Case	Hinges	Configs	Reject Cell	Spect. CIC	Emco. CIC	Tumble Ave Incident P (W)	Qty of Cell/CIC	Cell/CIC
		4x Sides			TRUE			
		Top/Bottom	TRUE					
		Deployables	TRUE					
		Cost ea.	$50	$300	$600			
1	0	Cube				3.40	12	$5,000
3a	1	Stow	4	-	8	3.40	12	$5,200
		Deploy	8	-	8	4.12	16	
4a	2	Stow	4	-	8	3.40	12	$5,400
		Deploy	12	-	8	4.75	20	
4c	4	Stow	4	-	8	3.40	12	$5,800
		Deploy	20	-	8	6.09	28	

G

Case	Hinges	Configs	Reject Cell	Spect. CIC	Emco. CIC	Tumble Ave Incident P (W)	Qty of Cell/CIC	Cell/CIC
		4x Sides			TRUE			
		Top/Bottom			TRUE			
		Deployables	TRUE					
		Cost ea.	$50	$300	$600			
1	0	Cube				3.57	12	$7,200
3a	1	Stow	2	-	10	3.49	12	$7,400
		Deploy	4	-	12	4.28	16	
4a	2	Stow	2	-	10	3.49	12	$7,600
		Deploy	8	-	12	4.90	20	
4c	4	Stow	4	-	8	3.40	12	$8,000
		Deploy	16	-	12	6.22	28	

H

Case	Hinges	Configs	Reject Cell	Spect. CIC	Emco. CIC	Tumble Ave Incident P (W)	Qty of Cell/CIC	Cell/CIC
		4x Sides			TRUE			
		Top/Bottom	TRUE					
		Deployables			TRUE			
		Cost ea.	$50	$300	$600			
1	0	Cube				3.40	12	$5,000
3a	1	Stow	2	-	10	3.49	12	$7,400
		Deploy	4	-	12	4.27	16	
4a	2	Stow	2	-	10	3.49	12	$9,800
		Deploy	4	-	16	5.03	20	
4c	4	Stow	-	-	12	3.57	12	$14,600
		Deploy	4	-	24	6.66	28	

J

Case	Hinges	Configs	Reject Cell	Spect. CIC	Emco. CIC	Tumble Ave Incident P (W)	Qty of Cell/CIC	Cell/CIC
		4x Sides			TRUE			
		Top/Bottom			TRUE			
		Deployables			TRUE			
		Cost ea.	$50	$300	$600			
1	0	Cube				3.57	12	$7,200
3a	1	Stow	-	-	12	3.57	12	$9,600
		Deploy	-	-	16	4.43	16	
4a	2	Stow	-	-	12	3.57	12	$12,000
		Deploy	-	-	20	5.18	20	
4c	4	Stow	-	-	12	3.57	12	$16,800
		Deploy	-	-	28	6.79	28	

Figure 4 Four cases (favorites from Figure 2) in second more detailed analysis

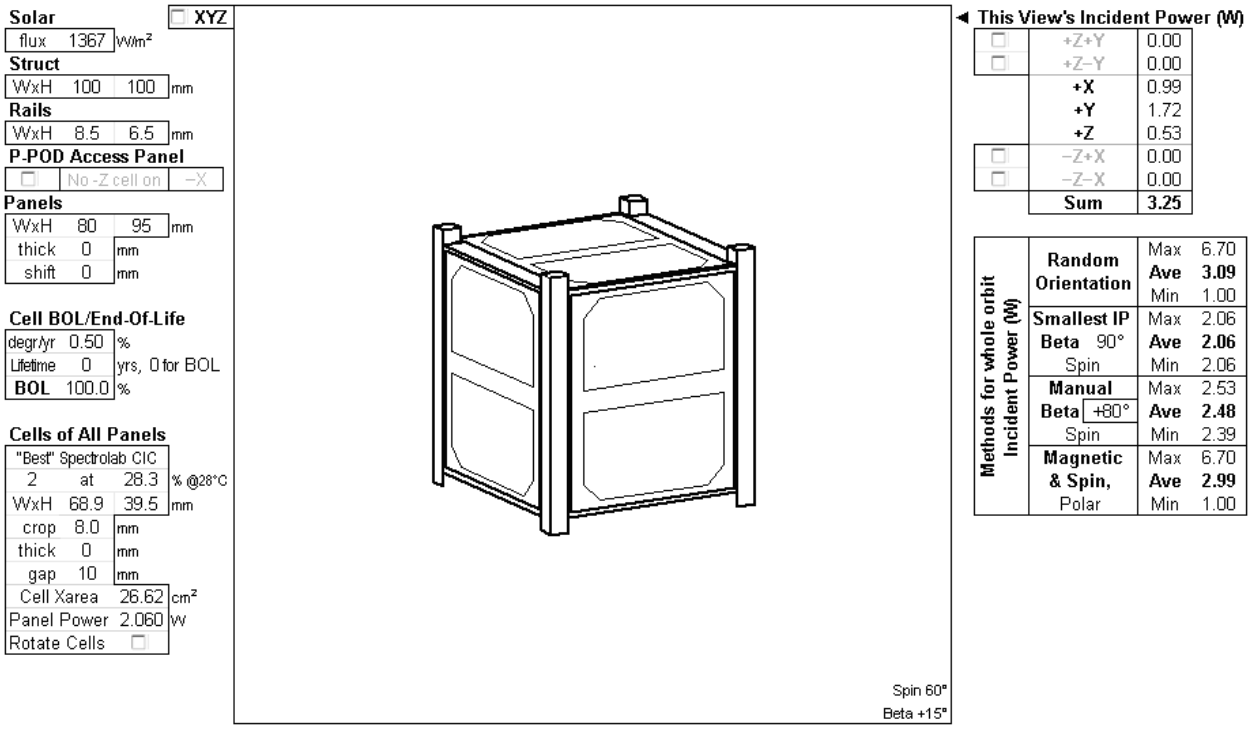

Figure 5 Incident Power and Energy Balance for Fox 1 and stowed Fox 2

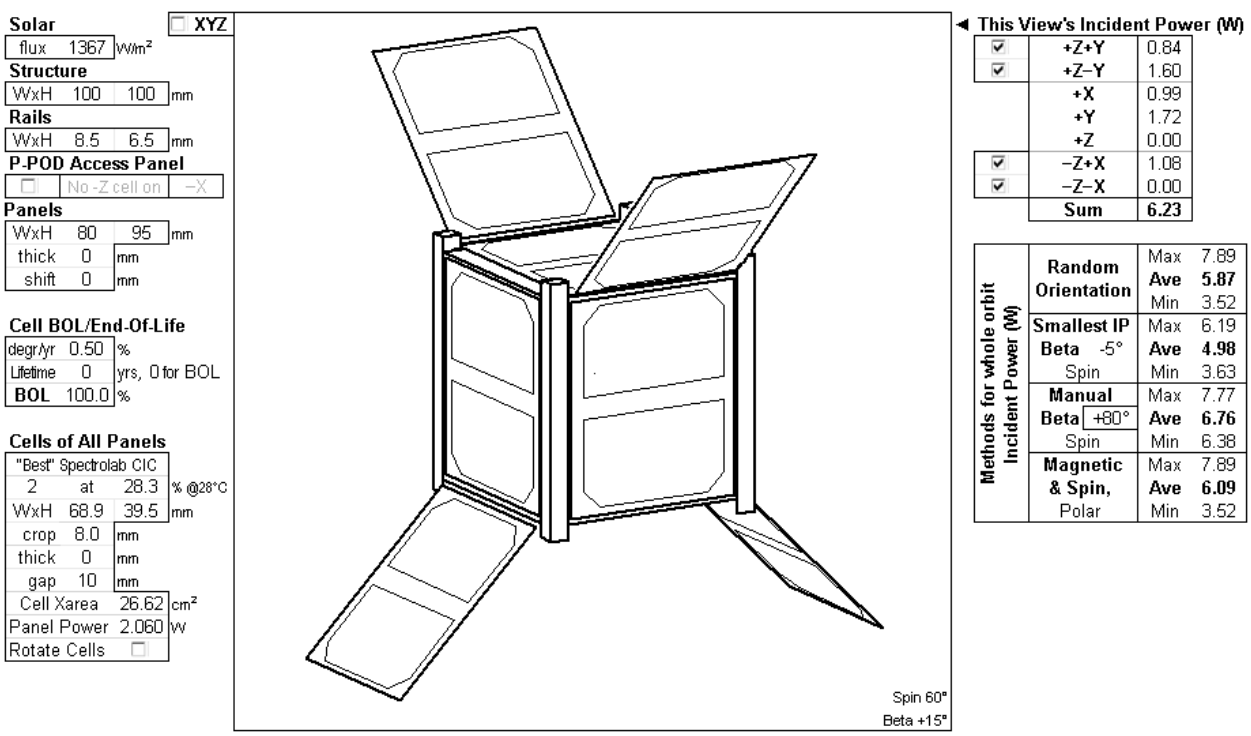

Figure 6 Incident Power and Energy Balance for deployed Fox 2

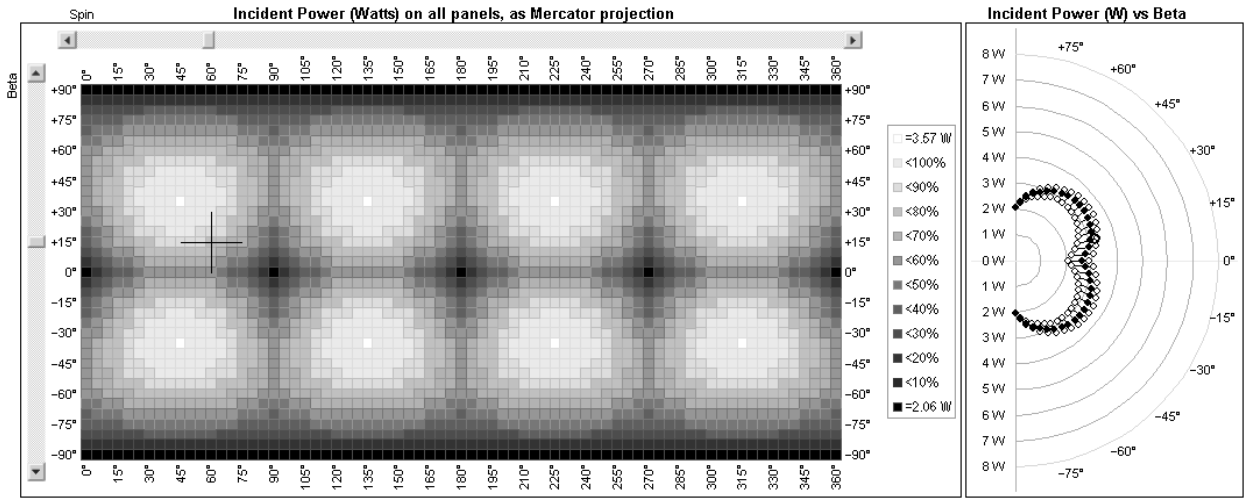

Figure 7 Fox 1 and stowed Fox 2 Incident Power vs (left) Spin & Beta, (right) Beta

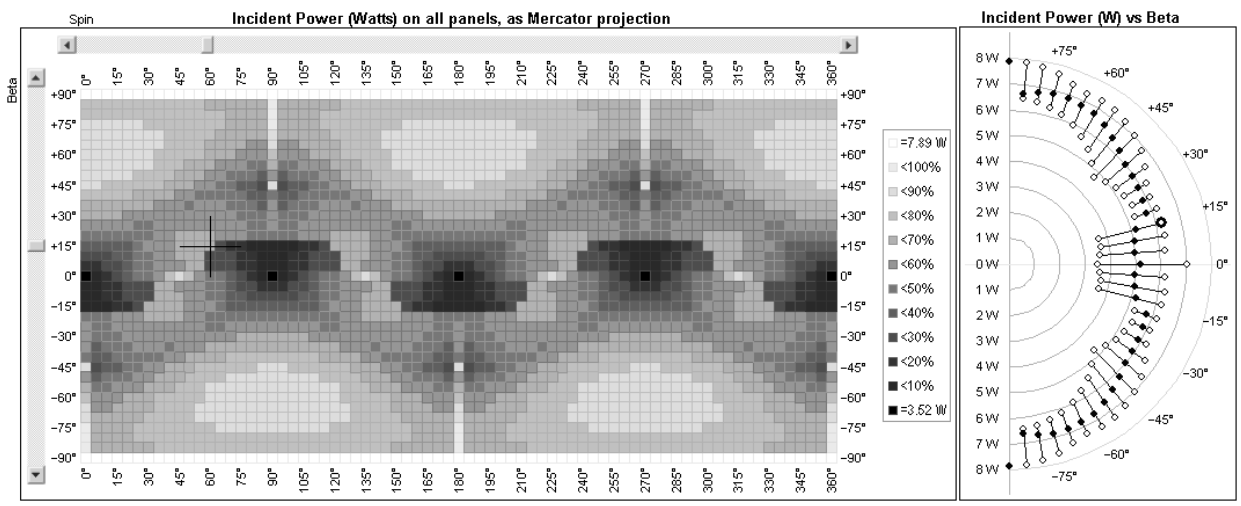

Figure 8 Deployed Fox 2 Incident Power vs (left) Spin & Beta, (right) Beta

Beta is the sun angle out of the plane orthogonal to the spin axis.
Beta 0° passes over the side solar panels during the course of a spin.
Beta +90° is over the +Z Solar Panel.
Beta -90° is over the -Z Solar Panel.

These show the valleys and troughs in the sum of all incident power, as a function of orientation at 5° increments of both Spin and Beta. The radial plot vs Beta, is useful to review for a spinning satellite since it shows the range of values expected in one spin, which may be nominally on the order of magnitude of 1-3 RPM.

Figure 9 shows the contribution of individual panels to the sum showed in Figure 8 for deployed Fox 2. The shadowing laws are simplistic and can only “turn off” an individual CIC if it is partially shadowed. This is conservative.

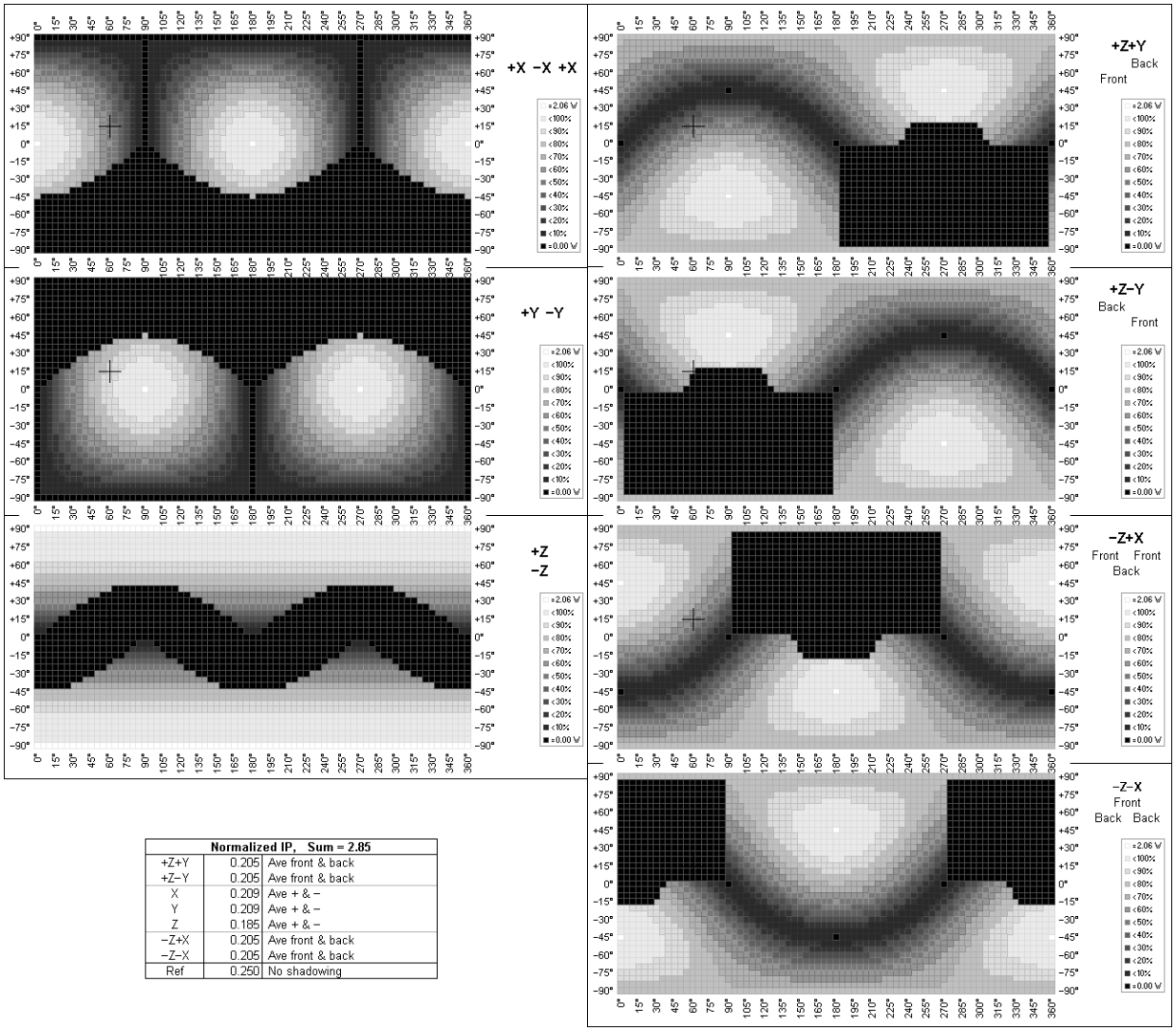

Normalized IP, Sum = 2.85		
+Z+Y	0.205	Ave front & back
+Z−Y	0.205	Ave front & back
X	0.209	Ave + & −
Y	0.209	Ave + & −
Z	0.185	Ave + & −
−Z+X	0.205	Ave front & back
−Z−X	0.205	Ave front & back
Ref	0.250	No shadowing

Figure 9 Incident Power of individual panels of deployed Fox 2, illustrating self-shadowing

Brief tangent: The simple model of magnetic field and subsequent tumble is fed into an ongoing better power system simulation (previously approximated as a static efficiency) and the thermal simulation.

For additional information on Figure 10 and Figure 11, see the paper Orbital Elements and Magnetic Tumble in Excel by this same author in these same proceedings.

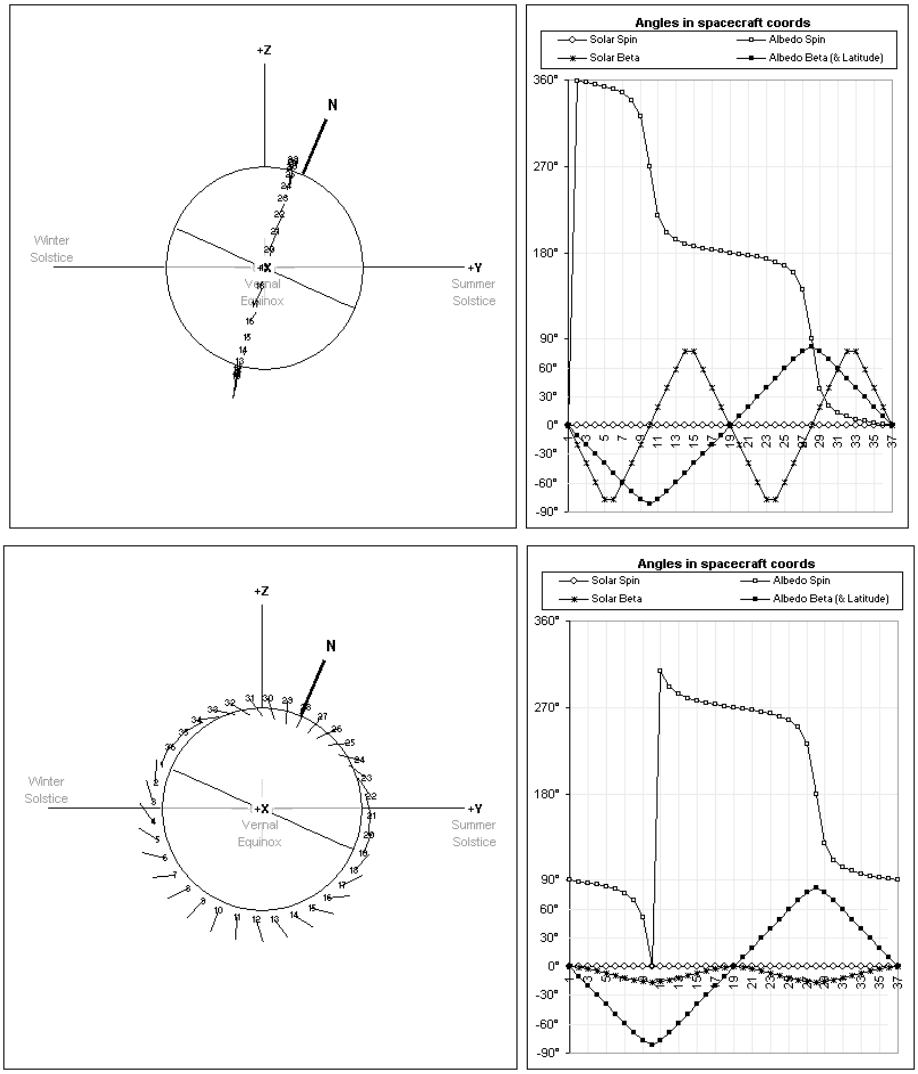

Figure 10 Simple model of magnetic tumble, sun sync orbit with (a) max eclipse or (b) no eclipse

The simple model is linear but reasonable against the very complicated IGRF magnetic model.

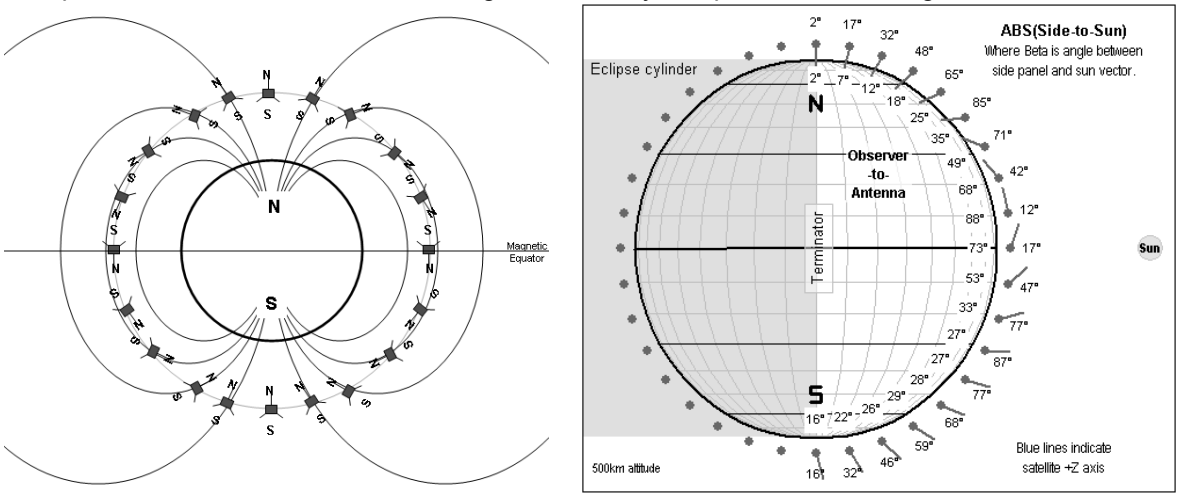

Figure 11 (a) Earth's magnetic field lines envisioned, (b) IGRF model at 0° Longitude

For space applications, cells are offered in a package called CICs, or Cell Interconnect Coverglass. The CIC currently being considered is the 28.3% efficient (at 28° C) 26.62 cm^2 UTJ from Spectrolab, measuring 68.9x39.5 mm. See Figure 12.

Figure 12 UTJ CIC (front & back)
Image: www.spectrolab.com/DataSheets/cells/PV UTJ Cell 5-20-10.pdf

Two of these cells could be arranged on a panel. The physical layout the cells will be back-to-back and their terminals separated. This allows the cells to be wired in series or parallel, even though they may physically appear to be in parallel. A change to the wiring should not affect positions of cells, but merely the tracing of the PCB. Perhaps in the six months before cells must be purchased, the available cells may be minimally higher efficiency and perhaps be of even more ideal dimensions. Also available, but not selected for Fox, are bare "reject" cells, triangular "trim" cells, and terrestrial cells.

The side solar panels are constrained in width to no greater than 83 mm, due to the Rails. Extension beyond the basic 100 mm height is possible (up to 113 mm), and this additional volume will be used on Fox 2 for hinges and retention. Fox 1 side solar panels will be 82 mm wide and 100 mm long. See Figure 13.

The top solar panels will be constrained on Fox 1 and Fox 2 to 100x100 mm. See Figure 14. To the left and right of the cells, the antennas will emanate and be retained for stowage.

The solar panel substrates will be standard thickness (0.062 inch) PCBs. In the case of Fox 2, the deployable solar panels will have CICs front and back, and stow on the four side faces. The allowable envelope thickness is 6.5 mm, and providing a 1 mm gap between CICs, the stowed thickness should be approximately 6 mm. If thickness needs to be trimmed on Fox 2, then the fixed side solar panels could be fabricated as 0.031 inch thick PCBs, rather than the nominal 0.062 inch. The deployable panels will be exposed to bending stress when stowed, due to the retention at one end pulling the panel against the deployment spring. The deployable panels should remain 0.062 inch thick PCBs and specifically analyzed for bending and envelope compliance.

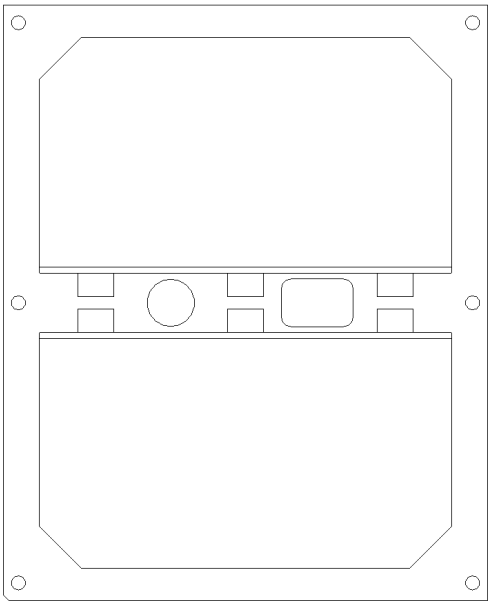

Figure 13 Side Solar Panel with nominal 26.62 cm^2 CICs, shown with umbilical holes

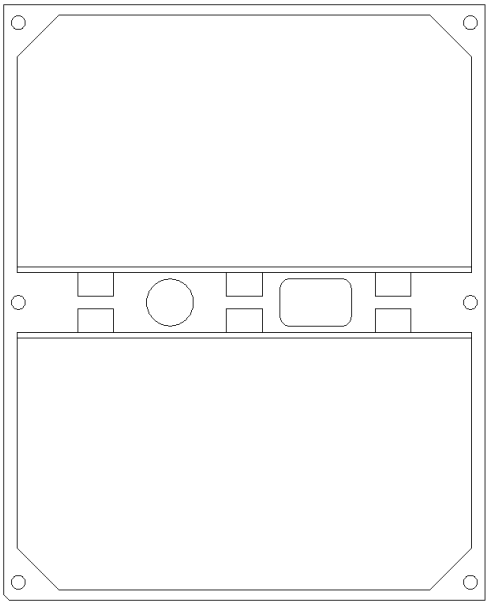

Figure 15 Side Solar Panel with optional 29.85 cm^2 CICs

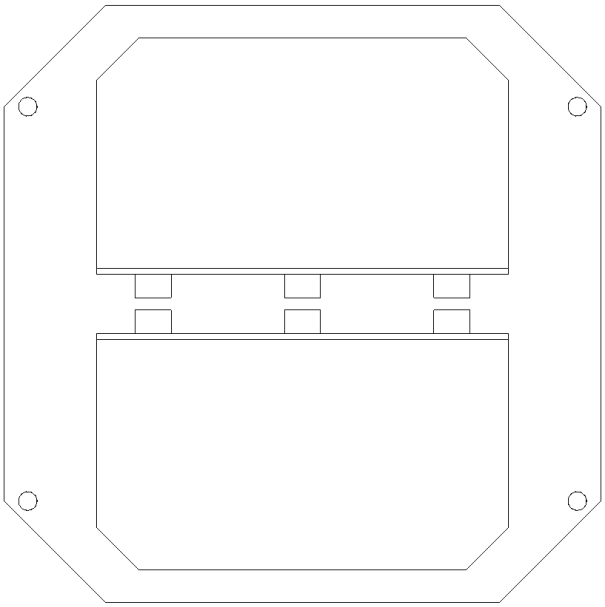

Figure 14 Top / Bottom Solar Panel with nominal 26.62 cm^2 CICs.

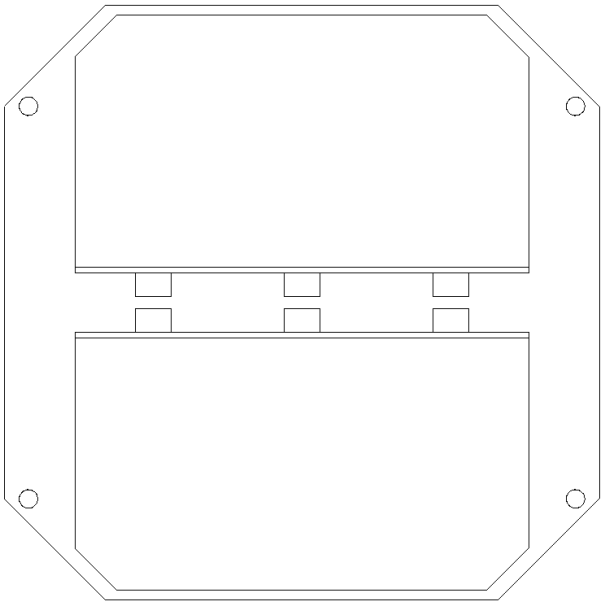

Figure 16 Top / Bottom Solar Panel with optional 29.85 cm^2 CICs

Note that the solar panels are designed to handle the dimensions of larger CICs, in the range of the Spectrolab's 29.85 cm^2 UTJ, which measures 76.3x43.3 mm. This insures that fastener placement will not have to change to accommodate some larger cells that may be affordably available in the future.

Second Major Trade - Structure

The next major trade was the scheme for structure, generically as milled struts or as sheetmetal, and buy versus make. Cal Poly's CP series of CubeSats uses a milled strut structure, for instance. Pumpkin Inc's commercial product called CubeSat Kit is a sheetmetal example. First, it was decided that Fox should have a custom structure, so that its specific requirements are incorporated from the start, rather than as after thoughts. Second, sheetmetal structure appears to offer the greater volume for internal PCBs.

It was decided to use sheetmetal for the four side walls, and mill items as required. Furthermore, the sheetmetal could be bent at one, two, or four corners to form the Rails. Each bend per piece would eliminate fastener joints but cause the bent shape to be more expensive to fabricate within tolerances. It was decided to bend at two corners, so that two pieces of sheetmetal joint to form the four walls. Two bends per piece pushes some of the tight tolerances onto the bender, and some tolerances may be left during assembly. Two rows of fasteners at two diagonal corners assemble the two sheetmetal pieces together. See Figure 17 for an exploded view.

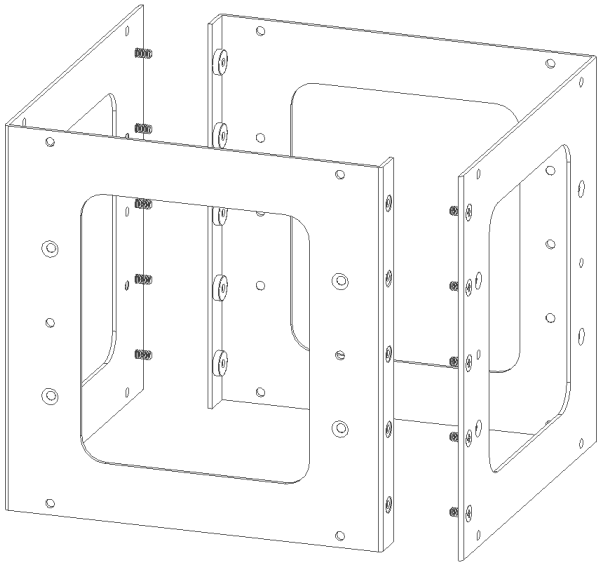

Figure 17 Exploded view of sheetmetal

Third Major Trade - PCBs

The last major trade concerned PCBs. It had been assumed initially that the avionics, batteries, and experiment might each have a specific heatsink to the structure, and could be re-arranged as necessary for center of gravity. Through discussion and iteration with Dick Jansson KD1K on thermal requirements and analysis results, this transformed to one lump with good thermal conduction between layers but poor thermal conduction to structure.

This led to the single stack of PCBs and a centered battery. All PCBs are stacked with long corner screws and spaced with aluminum spacers for conduction. Delrin blocks are used to minimize the heat loss to structure of avionics dissipated power. The Delrin material and geometry contribute to minimal heat conduction, despite its small size (17x17x8 mm). See Figure 18.

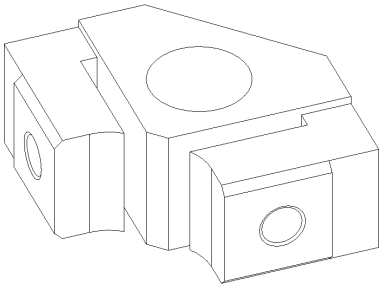

Figure 18 Delrin block

Figure 19 shows a minimal set of 6 PCBs: 1 experiment on top, 2 avionics at bottom, and centrally 3 PCBs around 4 "A" rechargeable round cells.

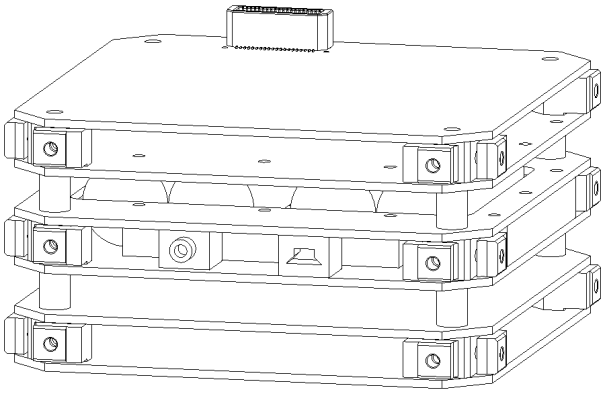

Figure 19 Min set of 6 PCBs (4 "A" cells)

Figure 20 shows a minimal set of 6 PCBs: 1 experiment on top, 2 avionics at bottom, and centrally 4 PCBs around 3 “C” rechargeable round cells.

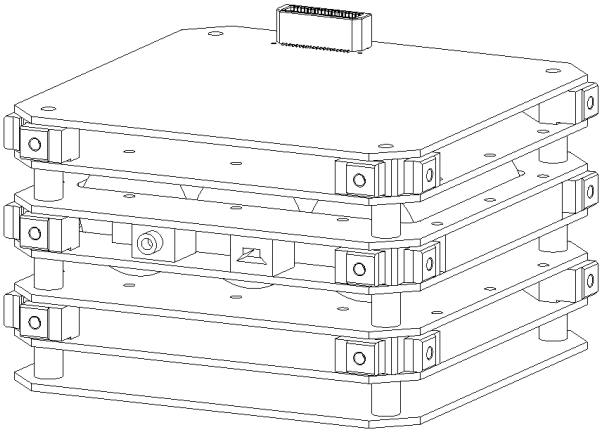

Figure 20 Min set of 7 PCBs (3 "C" cells)

The gap between PCBs is dictated by the choice of connector, which offers 5 or 8 mm gaps. To accommodate low conduction Delrin blocks for mounting the PCB stack to structure, the gap between, above and below the battery PCBs is fixed at 8mm. All other gaps may be 5 or 8 mm, allowing for connector choice based on heights required for components on PCBs.

Figure 21 shows a maximum set of 10 PCBs, to maximize experiment volume. The experiment is shown as PCBs, but may in fact occupy the equivalent volume as a box.

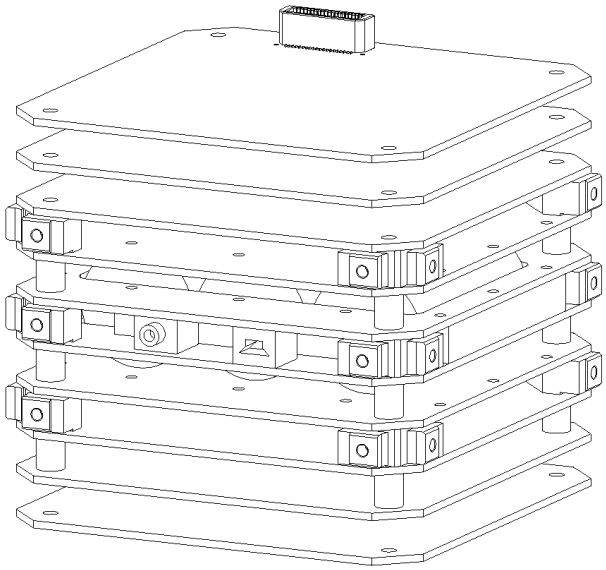

Figure 21 Max set of 10 PCBs (3 "C" cells)

Various internal components are conceptually shown in

Figure 22, a hidden line view from above.

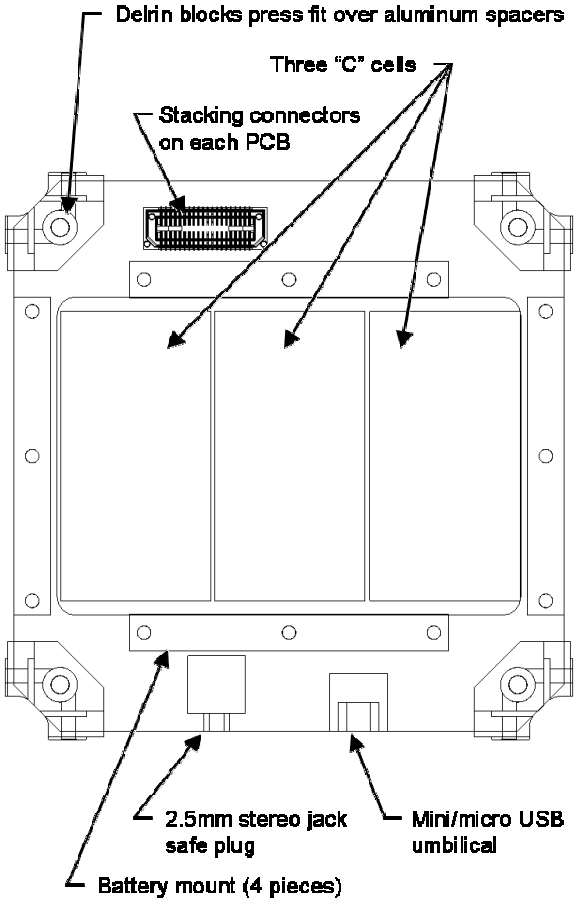

Figure 22 PCB Stack with components not normally visible within stack

Integration Sequence

1) Assemble batteries, umbilicals, magnet(s), hysteresis rods, and ballast as required to “central” PCB(s). This is then capped by two PCBs for PSU, but each of these PCBs can only have components on one side of the board due to the volume of batteries. The PSU PCBs may or may not be part of the stack that is assembled independently of the corner screws.

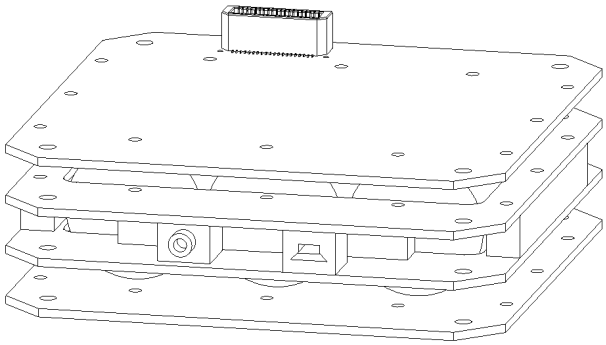

Figure 23 3 “C” cells between 2 PSU PCBs

2) Assemble remaining PCBs (max 10) to include avionics and payload. Secure with long bolts at the corners, setting gap with aluminum spacers, and inserting Delrin blocks as required for later attachment to structure. See Figure 19, Figure 20, or Figure 21 depending on number of PCBs.

3) Parallel to the PCB activities, the structure sides can be assembled. See Figure 17.

4) The PCB stack is slid into place (see Figure 24) and secured using only those screw locations later underneath the Side Solar Panels (see Figure 25).

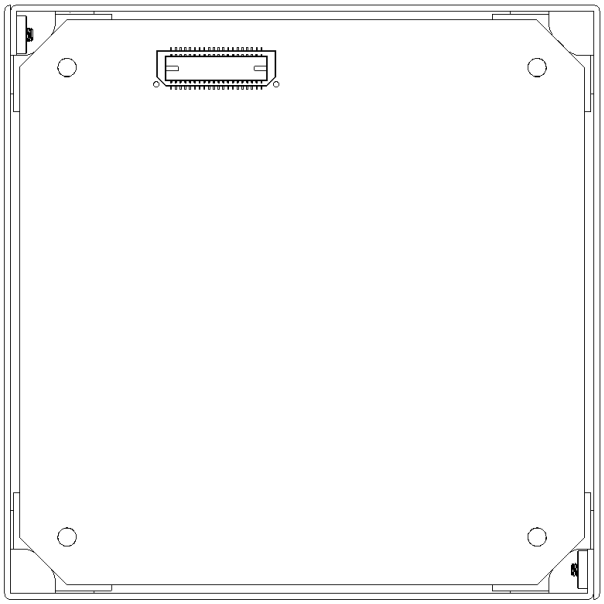

Figure 24 Sliding PCB Stack between sides

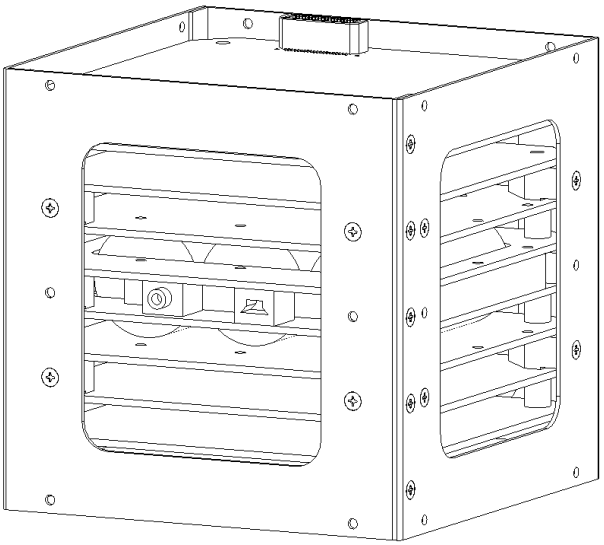

Figure 25 Flush Screws from Walls to PCBs

This will temporarily leave no screws in the Delrin blocks at the center plane of the CubeSat.

5) Add each Side Solar Panel, using only two screws each into those remaining Delrin blocks of the PCBs stack.

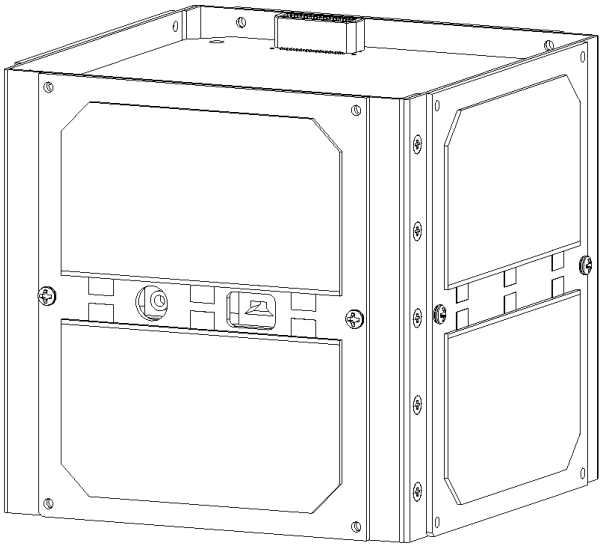

Figure 26 Add Side Solar Panels

6) Add the nub extensions to the Rails (see Figure 27), to the Walls (see Figure 28), using screws at the corners of the Side Solar Panels.

Four Nubs in +Z have flat tops to contact the switches and springs of the neighboring CubeSat when inside the P-POD for launch.

Two Nubs in –Z have separation springs, and two Nubs in –Z have contact switches (attachment shown is conceptual).

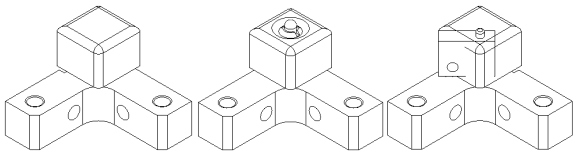

Figure 27 Nubs
(a) +Z, (b) -Z spring, (c) -Z switch

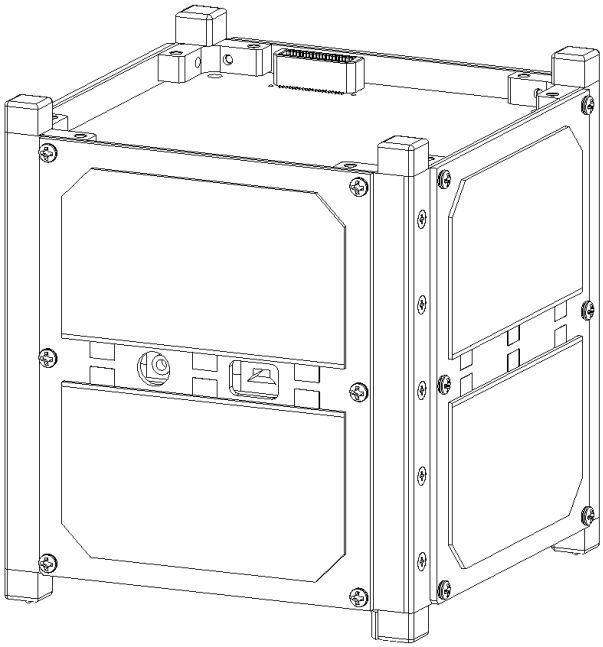

Figure 28 Add Nubs at Side Solar Panel corners

7) Add the Top and Bottom Solar Panels. See Figure 29.

8) Finally, the whip antennas would be attached then stowed, by bending around the CubeSat edges without crossing over the rails.

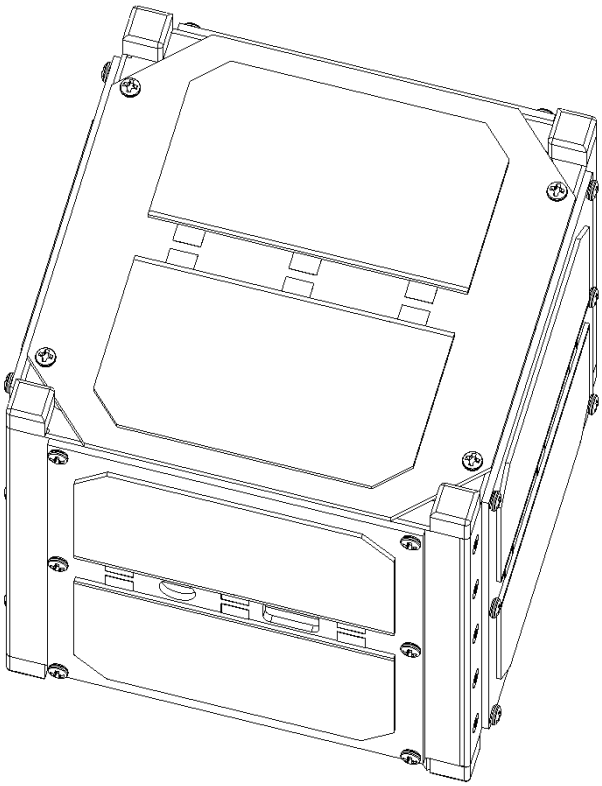

Figure 29 Add Top and Bottom Solar Panels

Antennas

The antennas are not shown, but would emanate from the area on the Top and Bottom Solar Panels between the CIC edges and the PCB edges. When stowed, they must have a length that is convenient to package with the restraint ideally also in those same areas of the Top and Bottom Solar Panels. However, there is substantial play in these allowable lengths by shifting the end points and by modifying the loop path around the CubeSat.

Few details of the antennas are known. Wire is planned, despite AMSAT's extensive experience with carpenter's measuring tape. If a wire were wrapped around the CubeSat, it would naturally form a large diameter circle, which would extend beyond the envelope. The wire could be tensioned, which would tend to straighten the wire over panels, but concentrate a bend/radius at the corners of edges of the CubeSat. Alternatively, the length of wire can have variable stiffness. The stiffer segments remain straight, the less stiff segments will bend. An initial concept was completed using 0.019 inch diameter guitar string, and sliding 3.5 inch long segments of aluminum tubing.

See Figure 30 for a photo of a wire with sleeve segments. In the interest of full disclosure, I not only accidentally permanently bent the guitar string but aluminum tubing as well. And finally to show the “stowed” configuration in a photo, three pieces of scotch tape were used, whereas for a flight unit a single restraint would be ideal, if perhaps naïve.

Figure 30 Photo of continuous wire and sleeves

An additional concept is to use torsion springs at the corners of the stowed antennas. The previous photo was essentially torsion springs with coil radius 0.5 inch and only ¼ turn. Rather, a coil diameter about 5mm and 3-5 turns should be considered. These can be off-the-shelf springs, with the legs of the springs are placed into the ends of sleeve segments. See Figure 31.

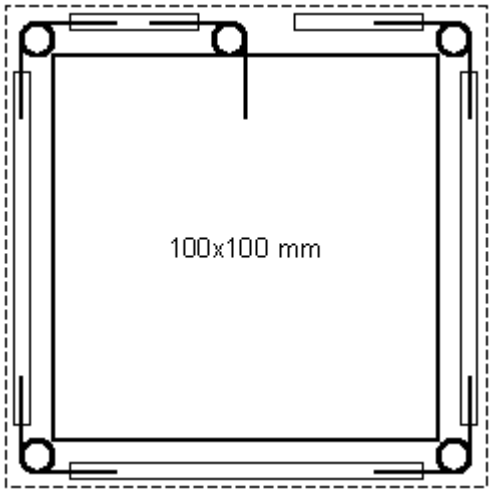

Figure 31 Antenna of springs and sleeves

Or the antenna can be custom formed as a single length of wire with custom locations for coils with several turns. Either scenario may have RF inductance implications requiring analysis.

Retention/deployment

The antennas of Fox 1 and Fox 2, and the deployable solar panels of Fox 2, will have springs that must be overcome by a retention mechanism to stay within the envelope allotted inside the PPOD launcher. Probably the most common technique used in the CubeSat community is the melting of fishing line using a Nichrome wire. This is easiest to implement, but is sensitive to thermal environment and can be tedious at integration.

An alternative is a coil/magnet as either a custom field neutralizer, or in the form of a commercial solenoid pin puller. Other more typical spacecraft devices are either too large or expensive.

A Shape Memory Alloy (SMA) custom latch may also be considered, but generically it may suffer from the same drawbacks as the Nichrome wire.

Tip mass on the end of a wire antenna is also a consideration.

Fox 2 Deployable Solar Panels

The conceptual changes to Side Solar Panels, volume for hinges and springs, and stowed thickness have been conceptualized. Preliminary sizing of torsion spring is shown in Figure 32.

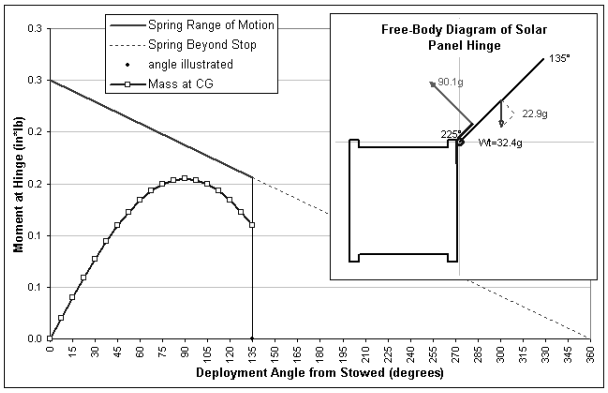

Figure 32 Fox 2 panel torsion spring

Performance Metrics

Solar cell area

Although Side Solar Panels could be up to 83x113 mm. 83x100 mm is prudent and allows for hinges, retention and antenna routing. Two 26.62 cm^2 CICs use about 64% of this area. The limit for accommodation may be near 30 cm^2 CICs, but these are not currently available from Spectrolab in small quantity.

The Top/Bottom Solar Panels may be 100x100 mm (cropped), but in addition to the 2 CICs they must accommodate antennas.

PCB volume

Of the basic 100x100x100 mm volume, 95x95x95 (86%) is available for up to 10 PCBs with avionics, battery and experiment.

Structure mass

Qty	Item	grams
2	Walls and hardware	65
8	Nubs on ends of rail	32
4	Side Solar Panels	115
2	Top/Bottom Solar Panels	68
1	Battery mount (WAG)	100
36	8 mm AL spacers	36
12	Delrin mounts	12
4	#4-40x3.75” threaded rod	24

Total = 452 grams (before margin is applied to hedge against potential mass increase during detailed design). CubeSat is limited to 1.33 kg.
Remaining is available to avionics, battery, experiment, and ballast (if required).

Cost

Fabrication of the walls should be left to a professional sheetmetal bender, due to the tight tolerances.

Nubs and Delrin blocks require milling, but volunteer machinists will be tapped first.
Otherwise, materials aren’t prohibitively expensive.

Compliance with CubeSat Design Specification

CDS Rev 12 specifies 7075 or 6061 Aluminum. This would be unsuitable for bending with little to no radius. Precedence exists for 5052-H32, and discussions with Cal Poly have already begun. A waiver would be required, and the expectation is that the waiver would be granted.

Compliance with NASA-REQ-317.01

If proposal for flight opportunity is accepted, then:

Testing will be completed as required, and may be in excess of those required in CDS. It is anticipated that all testing will be conducted at Protoflight Qualification levels.

The CDS 7075 or 6061 Aluminum requirement found in CDS Rev 12 is not a requirement of NASA-REQ-317.01.

No waivers for requirements are planned, nor are there any expectations that any waivers would be granted.

Analysis

Most of the analysis identified below will be drafted or completed in the coming few months. These items will be performed by hand calculations. No Finite Element Analysis (FEA) is planned.

1. Rail buckling
2. PCB natural frequency (Fn)
3. PCB bending and component clearances
4. PCB mounting screws (#2-56) in shear
5. PCB stacking screws (#4-40) in tension
6. Solar Panel natural frequency (Fn)
7. Fox 2 Deployable Panel bending while stowed

Garrett Skrobot at KSC provided advice, not a requirement, of preliminarily designing for 30 G’s in any direction.

Verifications

Some requirements may be verified as part of the prototyping process, and are independent of launch opportunity.

1. Release of antenna
2. No permanent bending of antenna
3. PPOD rail fit check
4. PPOD allowable envelope fit check
5. Mass limit and Center of Gravity (CG) location

Conclusion

Fox 1 mechanical design is currently at or slightly beyond concept design. It is anticipated that Fox 1 mechanical subsystem will meet the technical requirements, and schedule of flight units by the end of 2012.

Fox 2 mechanical design is designed to be identical except for the addition of deployable solar panels and any implications. This delta effort has begun but is at a slightly lower maturity.

Orbital Elements and Magnetic Tumble In Excel

Robert Davis KF4KSS

Abstract

A tool was needed to visualize satellite positions, and then derive orientations of the satellite with passive magnetic attitude control as it incrementally steps through one orbital period in a low earth orbit. This tool was to aid the thermal and power system analyses of the AMSAT Fox 1 CubeSat.

The orbit description is specified by Keplerian elements. Additional parameters are used to describe the sun. The satellite is assumed to have a magnet in the Z axis, and have solar panels on the six ordinate faces. No self-shadowing is considered, and the normalized incident power reported per panel can be scaled to any size solar panel. Spin rate can be implemented easily after this tool, as appropriate for each analysis.

The graphical output includes the orbit description, eclipsed points, and Z axis vector direction resulting from magnetic tumble. The tabular output includes (in spacecraft coordinates) yaw/pitch/roll, solar spin/beta/eclipse, earth albedo spin/beta/intensity, and the normalized incident power of 6 solar panels in ordinate directions.

This paper describes the physical explanation, calculation methods, and sample results of this tool created in Microsoft Excel.

Contents

1. Introduction by way of figures
2. Keplerian Elements
3. Orbit propagators
4. NASA/NORAD TLEs
5. IGRF magnetic model
6. Simple magnetic model
7. Rotation matrix
8. Excel tool sample output
9. Conclusion

Introduction by way of figures

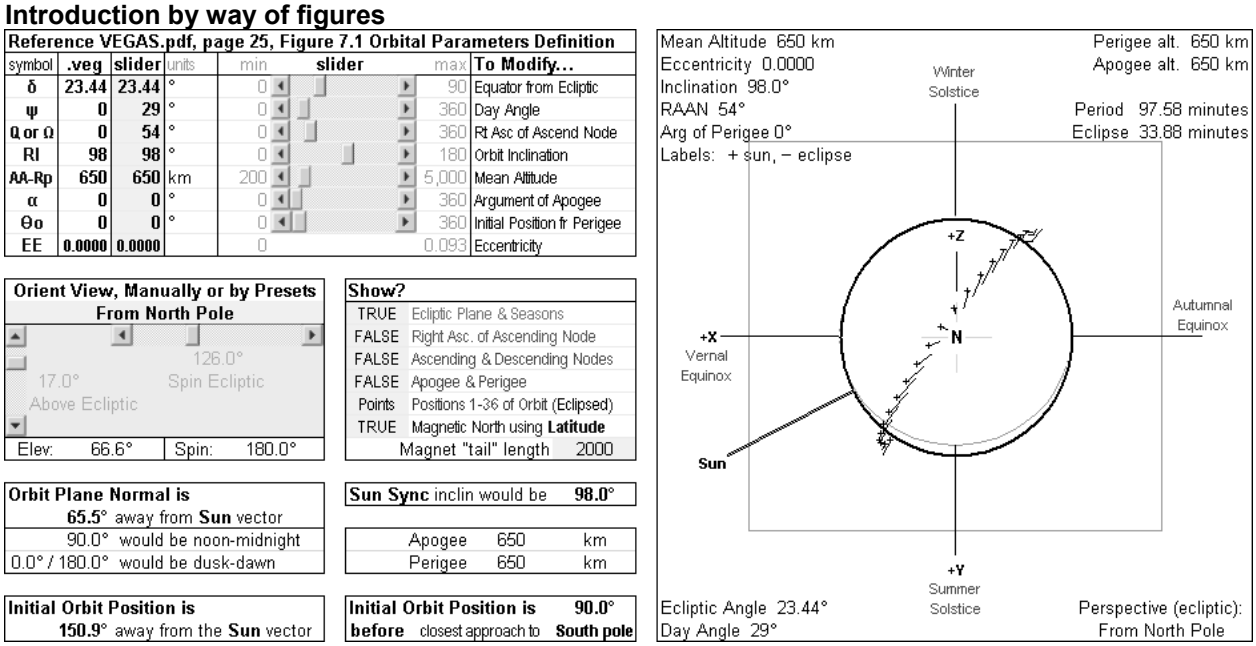

Figure 1 Screen capture of portion of tool's user interface

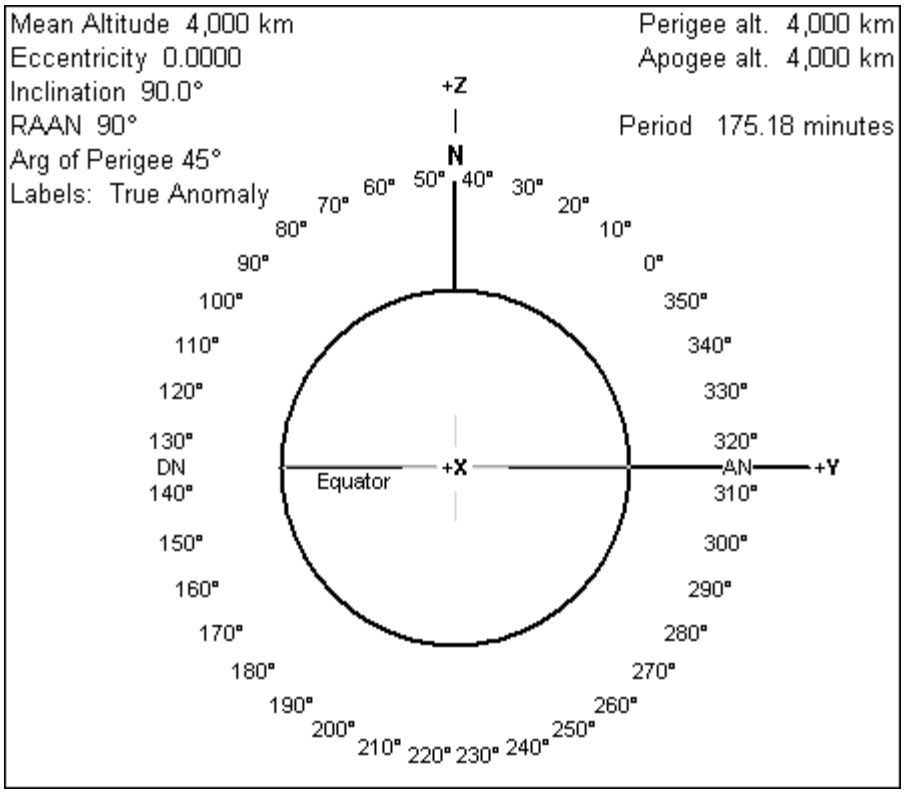

Figure 2 Keplerian Elements provide an orbit

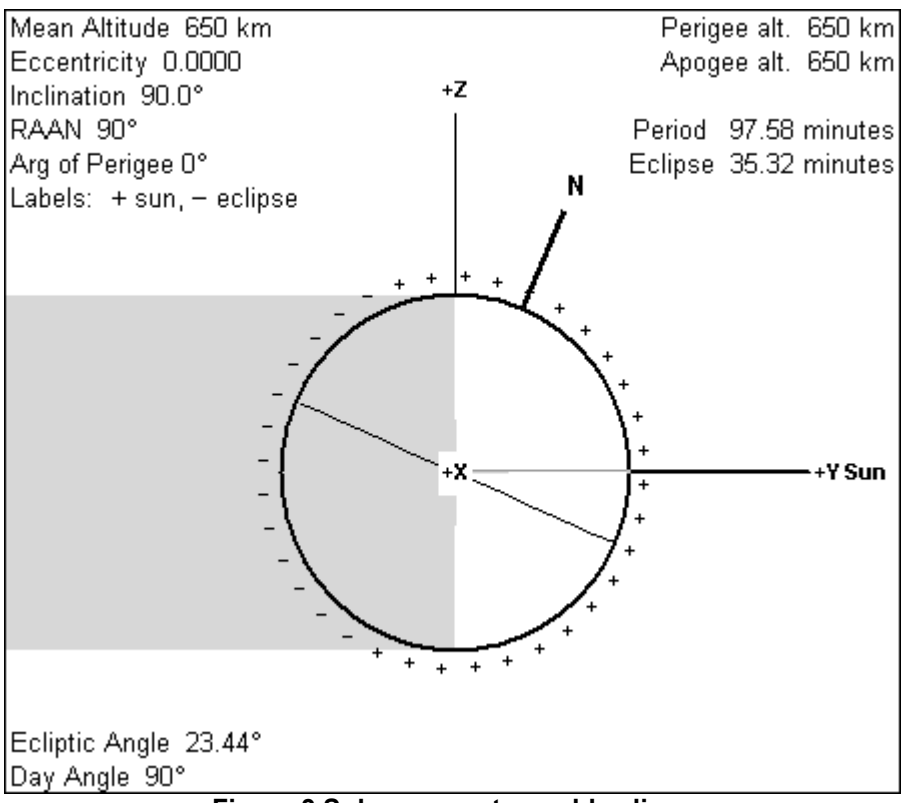

Figure 3 Solar parameters add eclipse

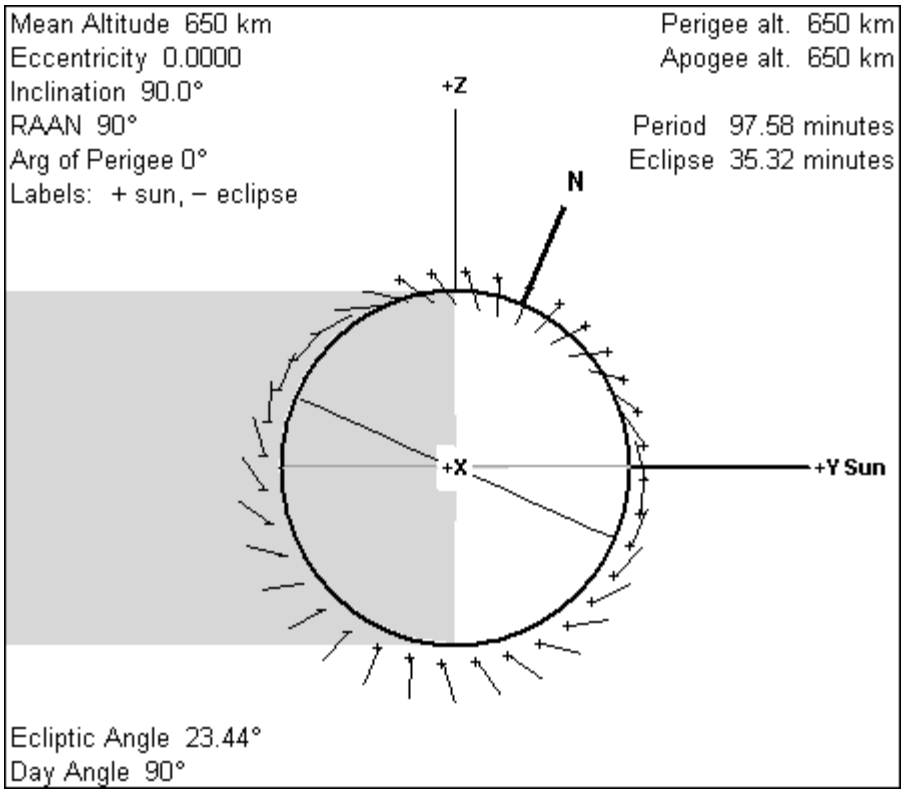

Figure 4 Simple magnetic model adds tumble

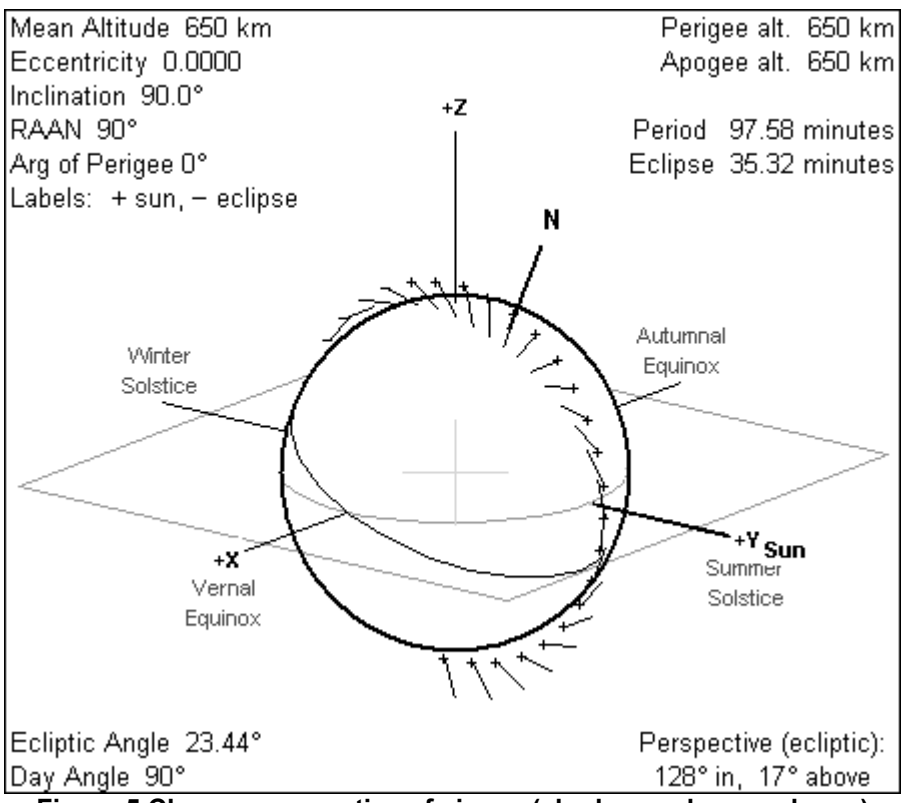

Figure 5 Change perspective of viewer (shadow no longer shown)

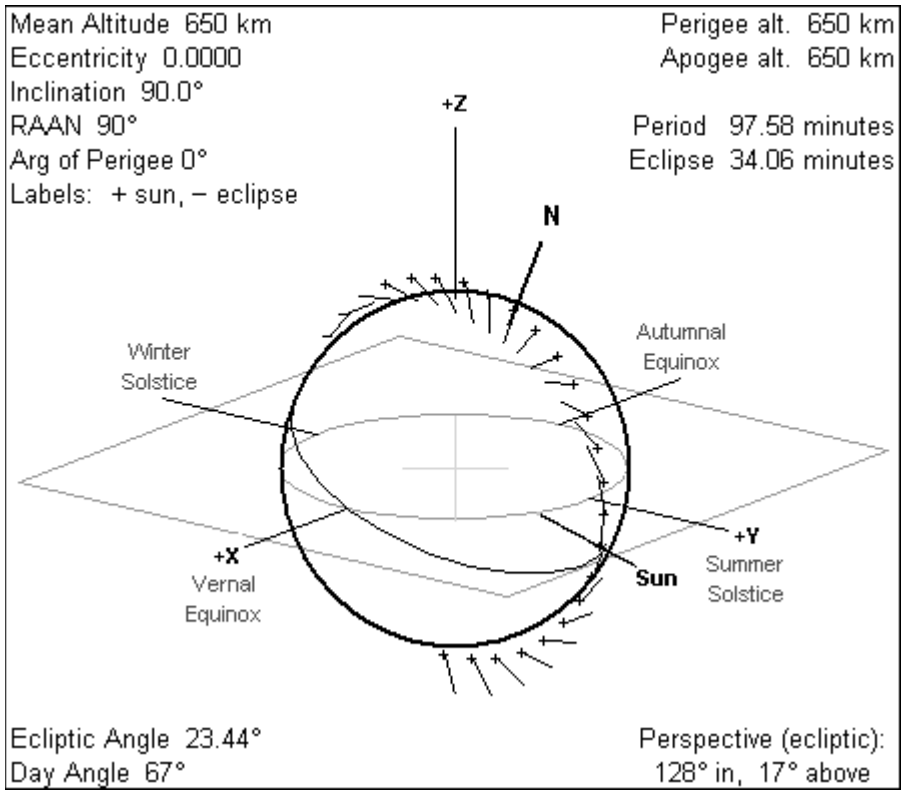

Figure 6 Change Solar Day (season)

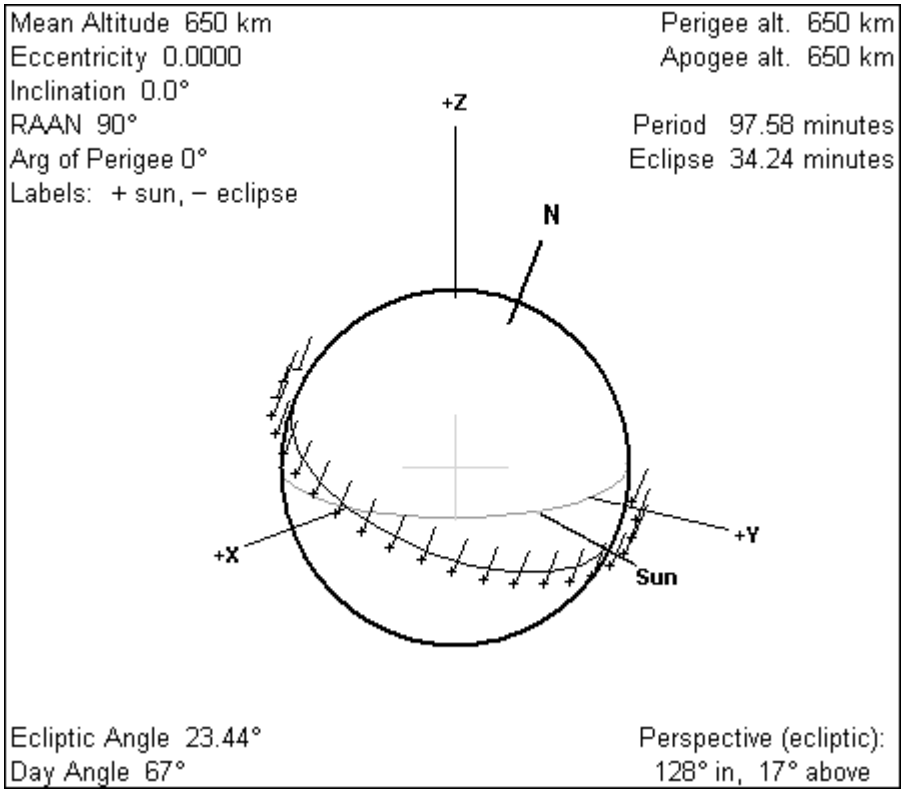

Figure 7 Note there is no tumble in equatorial orbit

Keplerian Elements (Orbital Parameters)
Describes one orbit

Name	Physical Meaning	Range of Values	Use to Calculate
Semimajor Axis	Average distance from the center of the satellite to the center of the earth, by formula (min+max)/2	> radius of the Earth (about 6,371 km) + altitude of atmosphere (about 150km)	1. Period 2. Mean Motion
Eccentricity	Deviation from circular.	0 to <1 Upper limit must keep Perigee above atmosphere.	1. Perigee 2. Apogee
Inclination	Angle between the equatorial and orbit planes.	0 to +180°	
Right Ascension (or Longitude) of Ascending Node (RAAN)	The polar angle to the intersection of the equatorial and orbit planes, on the side corresponding to the satellite path crossing from South to North (Ascending Node).	0 to 360° or -180 to +180°	
Argument of Perigee	Angle between Ascending Node and Perigee	0 to 360° or -180 to +180°	
Mean or True Anomaly	Distance into orbit. Mean is time (area) based. True is angle based.	≥ 0 < complete orbit	

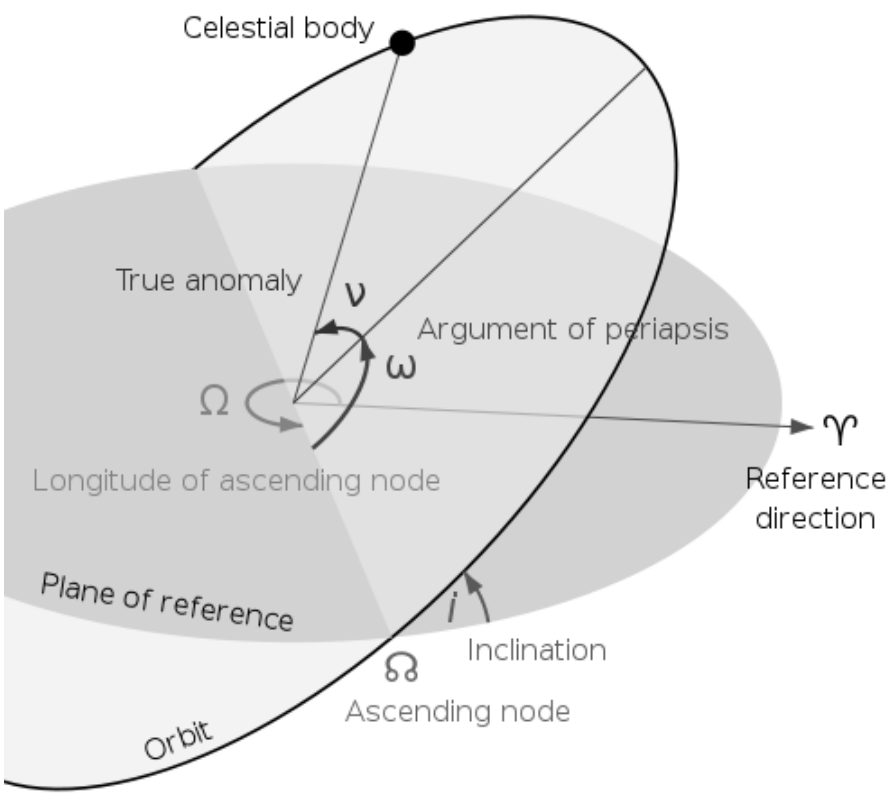

Figure 8 Keplerian Elements (http://en.wikipedia.org/wiki/Orbital_elements)

Orbit propagators would also use
Extends description to many subsequent orbits

Name	Physical Meaning	Range of Values
Epoch	Reference (or "start") date & time when perturbation errors are zero.	(various)
(various rates)	Orbit change over time due to perturbations (drag, solar pressure, etc).	(various rates)

These are why you must "update your Keps" in satellite pass/Doppler prediction software!

NASA/NORAD TLE
All of these can be found in the NASA Two Line Elements (TLEs) or NORAD Three Line Elements.
NORAD simply adds their own designation as the first line before the standard two lines.
TLEs are used by programs to propagate orbits by long times to predict satellite passes. Use that button that says "*Update Keps*"!

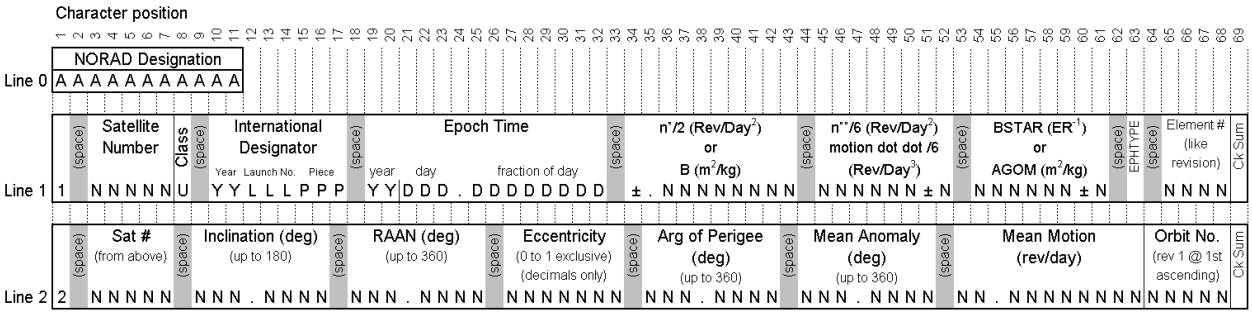

Based on definition from T.S. Kelso's http://celestrak.com/NORAD/documentation/tle-fmt.asp
Sample:

```
AO-51
1 28375U 04025K   11278.94969477  .00000184  00000-0  67678-4 0 00903
2 28375 098.1114 251.6489 0084742 093.8962 267.1944 14.40788986382010
```

Programs that predict satellite motion (propagate orbit) must solve equations of motion, which results in a circle or ellipse.
We won't. Rather, we'll just trust that the satellite will follow a circle or ellipse. This means the orbit is not propagated by physical formulas, but assumed by geometry.

Solar Parameters
Locates the Sun to add directional illumination, eclipse, and albedo.
Used by the Verified Earthshine, Geometric Albedo & Solar (VEGAS) software

Name	Physical Meaning	Range of Values
Ecliptic Angle	Angle between equatorial and ecliptic planes.	23.44°
Day Angle	Geocentric angle to the sun, corresponding to seasons during a year.	0 to 360°

It is not valid to vary Day Angle as if VEGAS were a propagator. VEGAS does not incorporate an Epoch and rate-based changes to Keplerian Elements.

IGRF magnetic model

The International Association of Geomagnetism and Aeronomy (IAGA) releases a complex model of the earth's magnetic field called the International Geomagnetic Reference Field (IGRF). The model consists of coefficients which act to provide spherical harmonics. As the number of coefficients are increased, the detail of "features" is increased.

The model is complex and difficult to implement mathematically. However, websites do export tabulated results.

http://omniweb.gsfc.nasa.gov/vitmo/cgm_vitmo.html

The strength of the field, the 2-D "compass direction", and the 3-D "tumble angle into the earth" will all vary with Latitude, Longitude, and altitude.

Data was retrieved at 10° increments of both Latitude and Longitude, at 500 km altitude.

The data can be displayed on Mercator plots, but is difficult to envision in this way.

At a representative Longitude, Figure 9 displays two sets of data.

The "tumble angle into the earth" from IGRF is the set of angles inside the circle of the earth but as absolute value.

The Beta angle of solar illumination, at the Day Angle equivalent to spring/fall equinoxes, is the set of angles outside the circle of the earth but as absolute value.

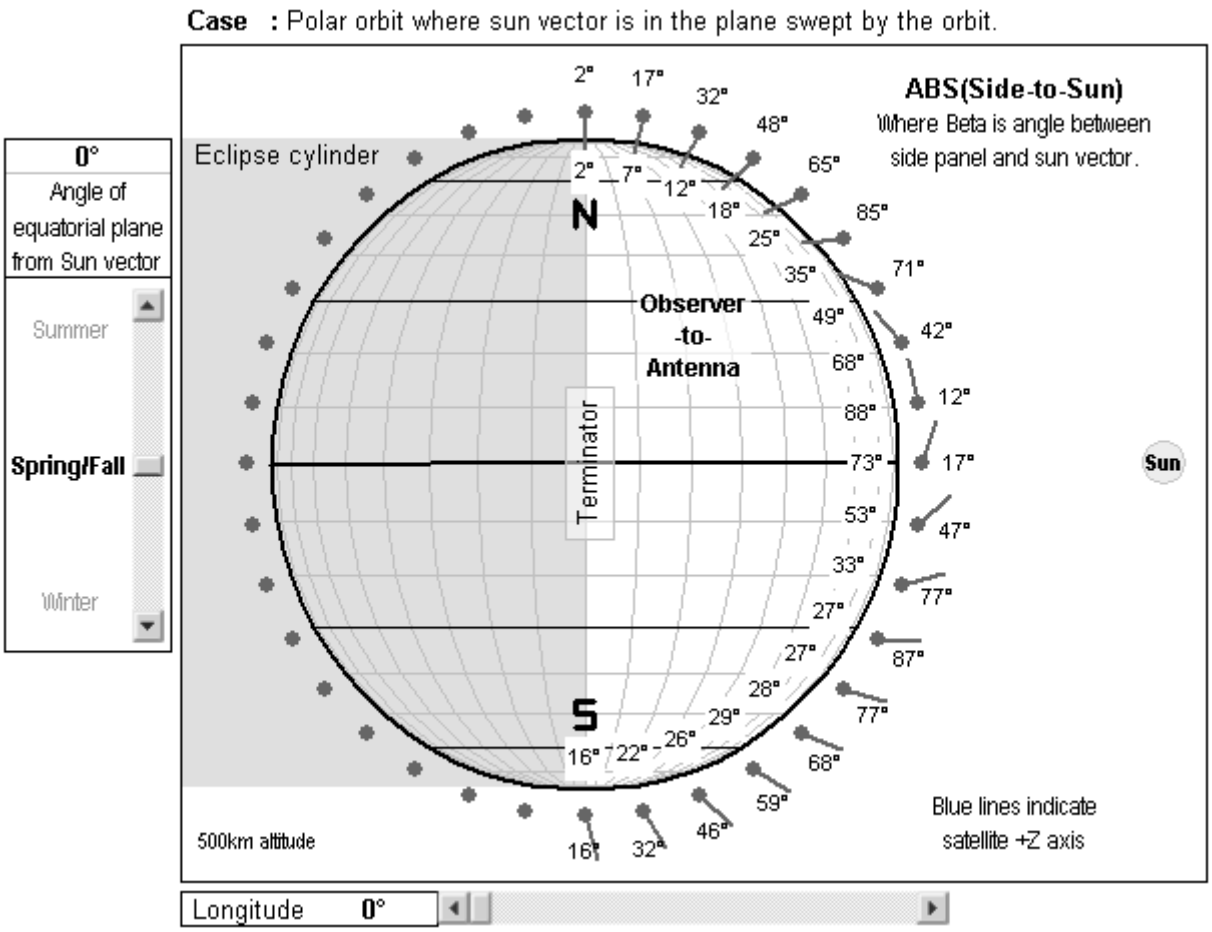

Figure 9 IGRF magnetic tumble at a representative Longitude (spring/fall)

Figure 10 is intended to illustrate that the magnetic field follows the earth orientation, but the Beta angle is also dependent on the Day Angle.

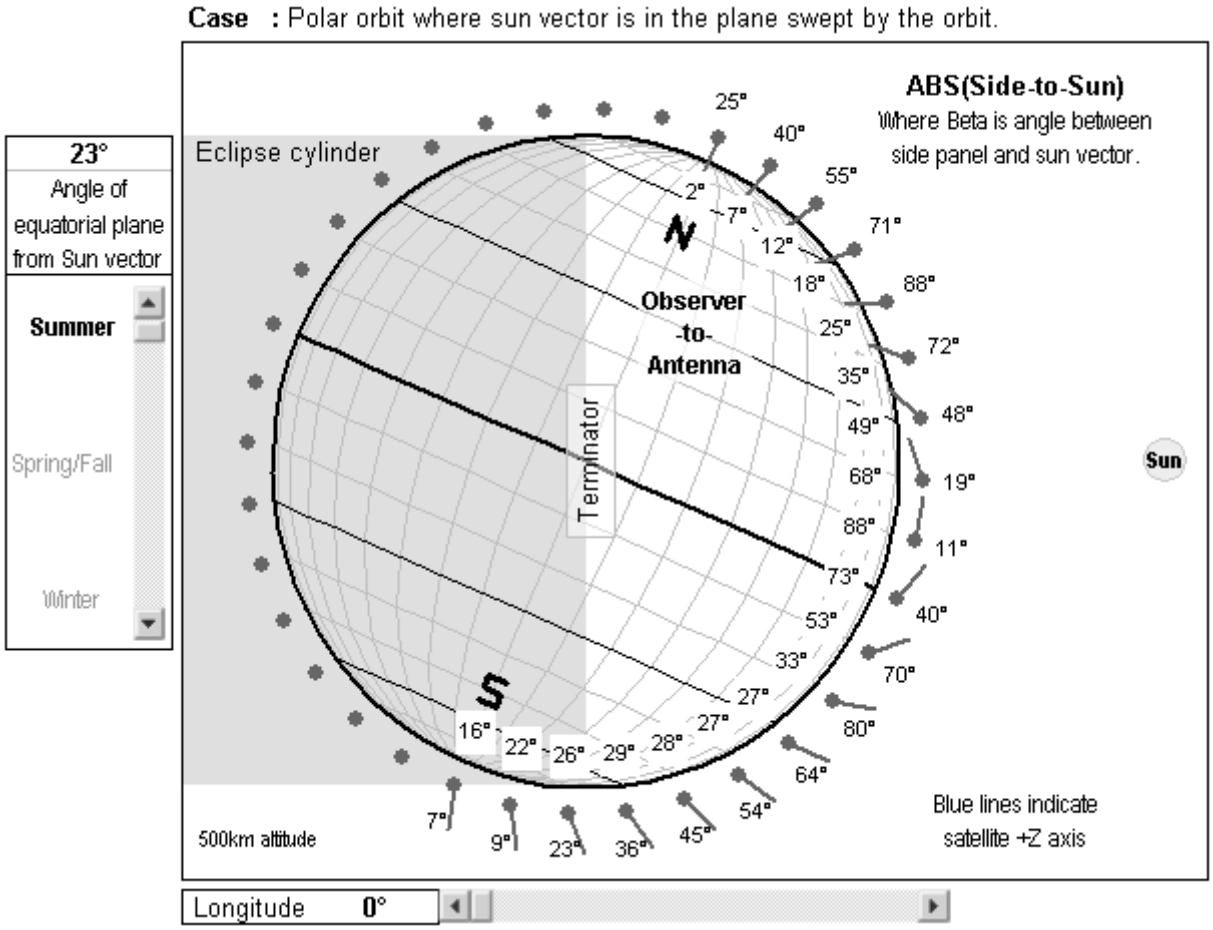

Figure 10 IGRF magnetic tumble at a representative Longitude (summer)

Simple magnetic model

The tabulated data of the IGRF model could be incorporated in magnetic modeling for satellite tumble. However, a simplification may well be appreciated. Consider this simplification.

First, eliminate the small variance as a function of Longitude.

Second, the tumble is directly proportional to the Latitude.

Third, the “compass direction” is always 0.

No variation with altitude.

Figure 11 shows the simple magnetic model tumble. Compare this to the IGRF values of Figure 9 and Figure 10 (use the values inside the circle of the earth).

Note that the North Pole is well represented, but the South Pole has significant error. In fact, the earth’s magnetic field is not perfectly aligned with its spin axis.

Note that the rate of magnetic tumble is constant in the simple model, but variable in the IGRF model. In the IGRF model, the tumble rate is slow near over the poles, and rapid near the equator.

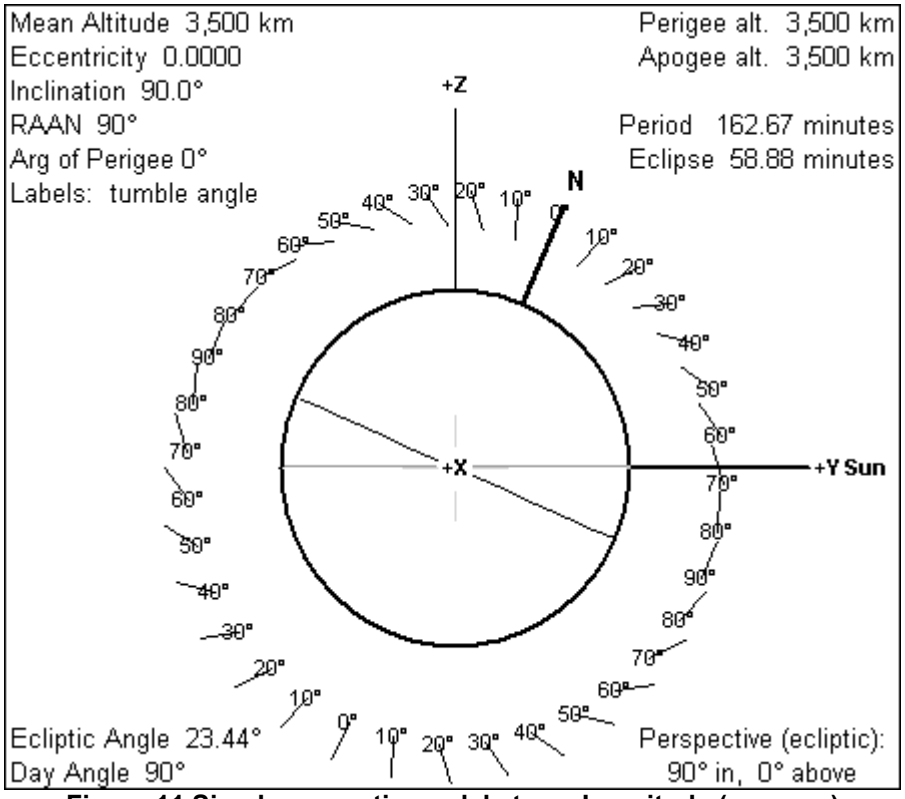

Figure 11 Simple magnetic model at any Longitude (summer)

Rotation Matrix

A 2-D rotation is given by the matrix

$$R = \begin{bmatrix} \cos\theta & -\sin\theta \\ \sin\theta & \cos\theta \end{bmatrix}$$

In 3-D a rotation about one of the axes is also simple. For example, rotation about X is given by the matrix

$$R = \begin{bmatrix} 1 & 0 & 0 \\ 0 & \cos\theta & -\sin\theta \\ 0 & \sin\theta & \cos\theta \end{bmatrix}$$

Multiple rotation matrices may be applied (multiplication), but are specific to order.

The employed solution was to perform the following steps:

1. 36 points 2-D rotation about Z with radius of semimajor axis (circular orbit), with offset angle including the Argument of Perigee and evenly spaced (True Anomaly).
2. 2-D rotation about X for Inclination
3. 2-D rotation about Z for Right Ascension of Ascending Node
4. 2-D rotation about X for Ecliptic Angle
5. Either
    a. 2-D rotation about Z for easy test for eclipse conditions, or
    b. 3-D rotation for Perspective

These were discrete intermediate calculations. For each point, at each intermediate calculation, 9 cells were used to calculate the 3x3 rotation matrix without using Excel's limited array functionality.

Excel tool sample output

The produced tool is a workbook in Microsoft Excel, and has many worksheets per case study. The workbook is reused and saved separately for every case study. Each worksheet performs a different, and usually serial, function. The worksheets are:

1. “VEGAS_In” allows for the editing (and formula driven entries) of a text file submitted to VEGAS for solar irradiation ray tracing.
2. “makeOMB_NOPT=3_Space” generates a yaw/pitch/roll table for the 36 orbit points, checks this against the user-entered data of the “VEGAS_show_orbit” worksheet, then appends to the “VEGAS_In” text file.
3. “VEGAS_Surface_Properties” automates the average surface properties calculation of the 6 faces of the satellite.
4. “VEGAS_Orbital_Elements” interrogates the text file from “VEGAS_In” to assign Keplerian Elements and various other parameters.
5. “VEGAS_show_orbit” is a user interface worksheet with input fields, many reference calculations, charts, and an output table. This has all the calculations about orbit positions, eclipse, magnetic tumble, and solar and albedo illumination.
6. “VEGAS_RawOut” is the location to import the text file results from a VEGAS run.
7. “VEGAS-SINDA_Converting” has the helper columns to reformat output from VEGAS as input to SINDA.
8. “SINDA_In” allows for the editing and formula-driven entries of a text file submitted to SINDA for thermal analysis.
9. “SINDA_SimplifiedOut” is the location to import the text file results from a SINDA run.
10. “Incident_Power_export” includes a brief parameters summary, tables and charts to compare (look for discrepancies between) the Excel, VEGAS, and SINDA results for incident power attributed to solar, albedo, and sum. It also includes a data table with solar and albedo intensity and spin/Beta angles, and solar panel temperatures.

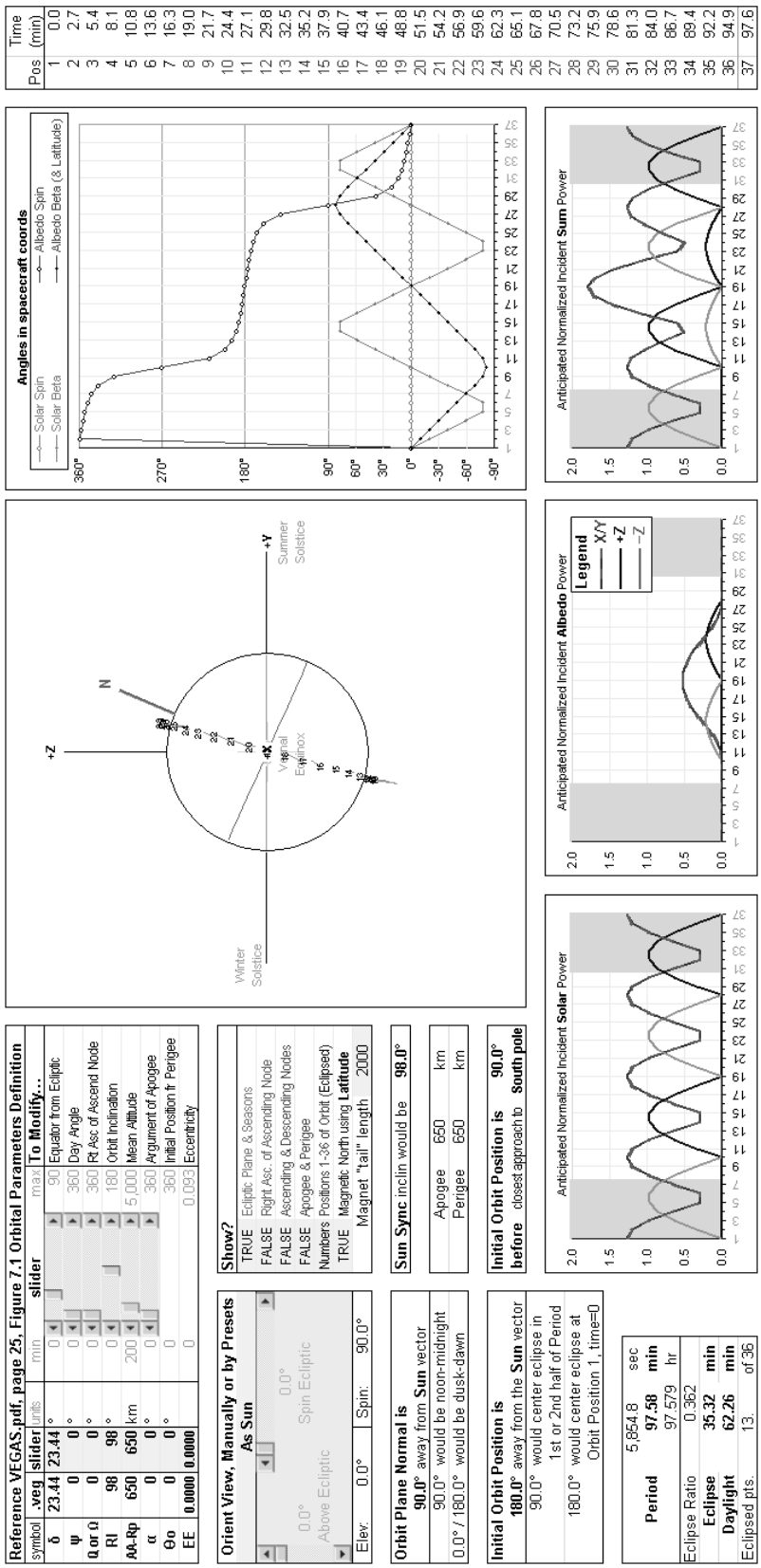

Figure 12 Screen Capture of tool's "VEGAS_show_orbit" worksheet (user interface portion)

		Earth sub-Sun pt			Earth sub-satellite pt		Earth sub-satellite pt			Satellite sub-Sun pt		Norm Incid Solar Pwr			Norm Incid Solar Pwr			Satellite Albedo pt		Norm Incid Albedo Pw			Sun to	Norm.	Norm Incid Albedo Pwr			Norm Incid Sum Pwr		
Pos	Time (min)	X	Y	Z	Longitude	Latitude	X	Y	Z	Spin	Beta	X/Y	+Z	−Z	X	Y	Z	Spin	Beta	X	Y	Z	Albedo	Albedo	X/Y	+Z	−Z	X/Y	+Z	−Z
1	0.0	1.00	0.00	0.00	180.0°	0.0°	-1.00	0.00	0.00	0.0°	0.0°	1.27	0.00	0.00	1.00	0.00	0.00	0.0°	0.0°	1.00	0.00	0.00	180.0°	0.00	0.00	0.00	0.00	1.27	0.00	0.00
2	2.7	1.00	0.00	0.00	178.6°	-9.9°	-0.98	0.02	-0.17	0.0°	-19.8°	1.20	0.00	0.34	0.94	0.00	-0.34	358.6°	-9.9°	0.98	-0.02	-0.17	170.0°	0.00	0.00	0.00	0.00	1.20	0.00	0.34
3	5.4	1.00	0.00	0.00	177.1°	-19.8°	-0.94	0.05	-0.34	0.0°	-39.5°	0.98	0.00	0.64	0.77	0.00	-0.64	357.1°	-19.8°	0.94	-0.05	-0.34	160.0°	0.00	0.00	0.00	0.00	0.98	0.00	0.64
4	8.1	1.00	0.00	0.00	175.4°	-29.7°	-0.87	0.07	-0.50	0.0°	-59.0°	0.65	0.00	0.86	0.51	0.00	-0.86	355.4°	-29.7°	0.87	-0.07	-0.50	150.0°	0.00	0.00	0.00	0.00	0.65	0.00	0.86
5	10.8	1.00	0.00	0.00	173.3°	-39.5°	-0.77	0.09	-0.64	0.0°	-77.2°	0.28	0.00	0.98	0.22	0.00	-0.98	353.3°	-39.5°	0.77	-0.09	-0.64	140.0°	0.00	0.00	0.00	0.00	0.28	0.00	0.98
6	13.6	1.00	0.00	0.00	170.6°	-49.3°	-0.64	0.11	-0.76	0.0°	-77.2°	0.28	0.00	0.98	0.22	0.00	-0.98	350.6°	-49.3°	0.64	-0.11	-0.76	130.0°	0.00	0.00	0.00	0.00	0.28	0.00	0.98
7	16.3	1.00	0.00	0.00	166.4°	-59.0°	-0.50	0.12	-0.86	0.0°	-59.0°	0.65	0.00	0.86	0.51	0.00	-0.86	346.4°	-59.0°	0.50	-0.12	-0.86	120.0°	0.00	0.00	0.00	0.00	0.65	0.00	0.86
8	19.0	1.00	0.00	0.00	159.1°	-68.5°	-0.34	0.13	-0.93	0.0°	-39.5°	0.98	0.00	0.64	0.77	0.00	-0.64	339.1°	-68.5°	0.34	-0.13	-0.93	110.0°	0.00	0.00	0.00	0.00	0.98	0.00	0.64
9	21.7	1.00	0.00	0.00	141.7°	-77.2°	-0.17	0.14	-0.98	0.0°	-19.8°	1.20	0.00	0.34	0.94	0.00	-0.34	321.7°	-77.2°	0.17	-0.14	-0.98	100.0°	0.00	0.00	0.00	0.00	1.20	0.00	0.34
10	24.4	1.00	0.00	0.00	90.0°	-82.0°	0.00	0.14	-0.99	0.0°	0.0°	1.27	0.00	0.00	1.00	0.00	0.00	270.0°	-82.0°	0.00	-0.14	-0.99	90.0°	0.00	0.00	0.00	0.00	1.27	0.00	0.00
11	27.1	1.00	0.00	0.00	38.3°	-77.2°	0.17	0.14	-0.98	0.0°	19.8°	1.20	0.34	0.00	0.94	0.00	0.34	218.3°	-77.2°	-0.17	-0.14	-0.98	80.0°	0.07	0.02	0.00	0.07	1.22	0.34	0.07
12	29.8	1.00	0.00	0.00	20.9°	-68.5°	0.34	0.13	-0.93	0.0°	39.5°	0.98	0.64	0.00	0.77	0.00	0.64	200.9°	-68.5°	-0.34	-0.13	-0.93	70.0°	0.14	0.07	0.00	0.13	1.05	0.64	0.13
13	32.5	1.00	0.00	0.00	13.6°	-59.0°	0.50	0.12	-0.86	0.0°	59.0°	0.65	0.86	0.00	0.51	0.00	0.86	193.6°	-59.0°	-0.50	-0.12	-0.86	60.0°	0.21	0.14	0.00	0.18	0.79	0.86	0.18
14	35.2	1.00	0.00	0.00	9.4°	-49.3°	0.64	0.11	-0.76	0.0°	77.2°	0.28	0.98	0.00	0.22	0.00	0.98	189.4°	-49.3°	-0.64	-0.11	-0.76	50.0°	0.27	0.22	0.00	0.21	0.51	0.98	0.21
15	37.9	1.00	0.00	0.00	6.7°	-39.5°	0.77	0.09	-0.64	0.0°	77.2°	0.28	0.98	0.00	0.22	0.00	0.98	186.7°	-39.5°	-0.77	-0.09	-0.64	40.0°	0.32	0.32	0.00	0.21	0.60	0.98	0.21
16	40.7	1.00	0.00	0.00	4.6°	-29.7°	0.87	0.07	-0.50	0.0°	59.0°	0.65	0.86	0.00	0.51	0.00	0.86	184.6°	-29.7°	-0.87	-0.07	-0.50	30.0°	0.36	0.40	0.00	0.18	1.06	0.86	0.18
17	43.4	1.00	0.00	0.00	2.9°	-19.8°	0.94	0.05	-0.34	0.0°	39.5°	0.98	0.64	0.00	0.77	0.00	0.64	182.9°	-19.8°	-0.94	-0.05	-0.34	20.0°	0.40	0.47	0.00	0.13	1.46	0.64	0.13
18	46.1	1.00	0.00	0.00	1.4°	-9.9°	0.98	0.02	-0.17	0.0°	19.8°	1.20	0.34	0.00	0.94	0.00	0.34	181.4°	-9.9°	-0.98	-0.02	-0.17	10.0°	0.41	0.52	0.00	0.07	1.72	0.34	0.07
19	48.8	1.00	0.00	0.00	0.0°	0.0°	1.00	0.00	0.00	0.0°	0.0°	1.27	0.00	0.00	1.00	0.00	0.00	180.0°	0.0°	-1.00	0.00	0.00	0.0°	0.42	0.54	0.00	0.00	1.81	0.00	0.00
20	51.5	1.00	0.00	0.00	358.6°	9.9°	0.98	-0.02	0.17	0.0°	-19.8°	1.20	0.00	0.34	0.94	0.00	-0.34	178.6°	9.9°	-0.98	0.02	0.17	10.0°	0.41	0.52	0.07	0.00	1.72	0.07	0.34
21	54.2	1.00	0.00	0.00	357.1°	19.8°	0.94	-0.05	0.34	0.0°	-39.5°	0.98	0.00	0.64	0.77	0.00	-0.64	177.1°	19.8°	-0.94	0.05	0.34	20.0°	0.40	0.47	0.13	0.00	1.46	0.13	0.64
22	56.9	1.00	0.00	0.00	355.4°	29.7°	0.87	-0.07	0.50	0.0°	-59.0°	0.65	0.00	0.86	0.51	0.00	-0.86	175.4°	29.7°	-0.87	0.07	0.50	30.0°	0.36	0.40	0.18	0.00	1.06	0.18	0.86
23	59.6	1.00	0.00	0.00	353.3°	39.5°	0.77	-0.09	0.64	0.0°	-77.2°	0.28	0.00	0.98	0.22	0.00	-0.98	173.3°	39.5°	-0.77	0.09	0.64	40.0°	0.32	0.32	0.21	0.00	0.60	0.21	0.98
24	62.3	1.00	0.00	0.00	350.6°	49.3°	0.64	-0.11	0.76	0.0°	-77.2°	0.28	0.00	0.98	0.22	0.00	-0.98	170.6°	49.3°	-0.64	0.11	0.76	50.0°	0.27	0.22	0.21	0.00	0.51	0.21	0.98
25	65.1	1.00	0.00	0.00	346.4°	59.0°	0.50	-0.12	0.86	0.0°	-59.0°	0.65	0.00	0.86	0.51	0.00	-0.86	166.4°	59.0°	-0.50	0.12	0.86	60.0°	0.21	0.14	0.18	0.00	0.79	0.18	0.86
26	67.8	1.00	0.00	0.00	339.1°	68.5°	0.34	-0.13	0.93	0.0°	-39.5°	0.98	0.00	0.64	0.77	0.00	-0.64	159.1°	68.5°	-0.34	0.13	0.93	70.0°	0.14	0.07	0.13	0.00	1.05	0.13	0.64
27	70.5	1.00	0.00	0.00	321.7°	77.2°	0.17	-0.14	0.98	0.0°	-19.8°	1.20	0.00	0.34	0.94	0.00	-0.34	141.7°	77.2°	-0.17	0.14	0.98	80.0°	0.07	0.02	0.07	0.00	1.22	0.07	0.34
28	73.2	1.00	0.00	0.00	270.0°	82.0°	0.00	-0.14	0.99	0.0°	0.0°	1.27	0.00	0.00	1.00	0.00	0.00	90.0°	82.0°	0.00	0.14	0.99	90.0°	0.00	0.00	0.00	0.00	1.27	0.00	0.00
29	75.9	1.00	0.00	0.00	218.3°	77.2°	-0.17	-0.14	0.98	0.0°	19.8°	1.20	0.34	0.00	0.94	0.00	0.34	38.3°	77.2°	0.17	0.14	0.98	100.0°	0.00	0.00	0.00	0.00	1.20	0.34	0.00
30	78.6	1.00	0.00	0.00	200.9°	68.5°	-0.34	-0.13	0.93	0.0°	39.5°	0.98	0.64	0.00	0.77	0.00	0.64	20.9°	68.5°	0.34	0.13	0.93	110.0°	0.00	0.00	0.00	0.00	0.98	0.64	0.00
31	81.3	1.00	0.00	0.00	193.6°	59.0°	-0.50	-0.12	0.86	0.0°	59.0°	0.65	0.86	0.00	0.51	0.00	0.86	13.6°	59.0°	0.50	0.12	0.86	120.0°	0.00	0.00	0.00	0.00	0.65	0.86	0.00
32	84.0	1.00	0.00	0.00	189.4°	49.3°	-0.64	-0.11	0.76	0.0°	77.2°	0.28	0.98	0.00	0.22	0.00	0.98	9.4°	49.3°	0.64	0.11	0.76	130.0°	0.00	0.00	0.00	0.00	0.28	0.98	0.00
33	86.7	1.00	0.00	0.00	186.7°	39.5°	-0.77	-0.09	0.64	0.0°	77.2°	0.28	0.98	0.00	0.22	0.00	0.98	6.7°	39.5°	0.77	0.09	0.64	140.0°	0.00	0.00	0.00	0.00	0.28	0.98	0.00
34	89.4	1.00	0.00	0.00	184.6°	29.7°	-0.87	-0.07	0.50	0.0°	59.0°	0.65	0.86	0.00	0.51	0.00	0.86	4.6°	29.7°	0.87	0.07	0.50	150.0°	0.00	0.00	0.00	0.00	0.65	0.86	0.00
35	92.2	1.00	0.00	0.00	182.9°	19.8°	-0.94	-0.05	0.34	0.0°	39.5°	0.98	0.64	0.00	0.77	0.00	0.64	2.9°	19.8°	0.94	0.05	0.34	160.0°	0.00	0.00	0.00	0.00	0.98	0.64	0.00
36	94.9	1.00	0.00	0.00	181.4°	9.9°	-0.98	-0.02	0.17	0.0°	19.8°	1.20	0.34	0.00	0.94	0.00	0.34	1.4°	9.9°	0.98	0.02	0.17	170.0°	0.00	0.00	0.00	0.00	1.20	0.34	0.00
37	97.6	1.00	0.00	0.00	180.0°	0.0°	-1.00	0.00	0.00	0.0°	0.0°	1.27	0.00	0.00	1.00	0.00	0.00	0.0°	0.0°	1.00	0.00	0.00	180.0°	0.00	0.00	0.00	0.00	1.27	0.00	0.00

Figure 13 Screen Capture of tool's "VEGAS_show_orbit" worksheet (additional portion)

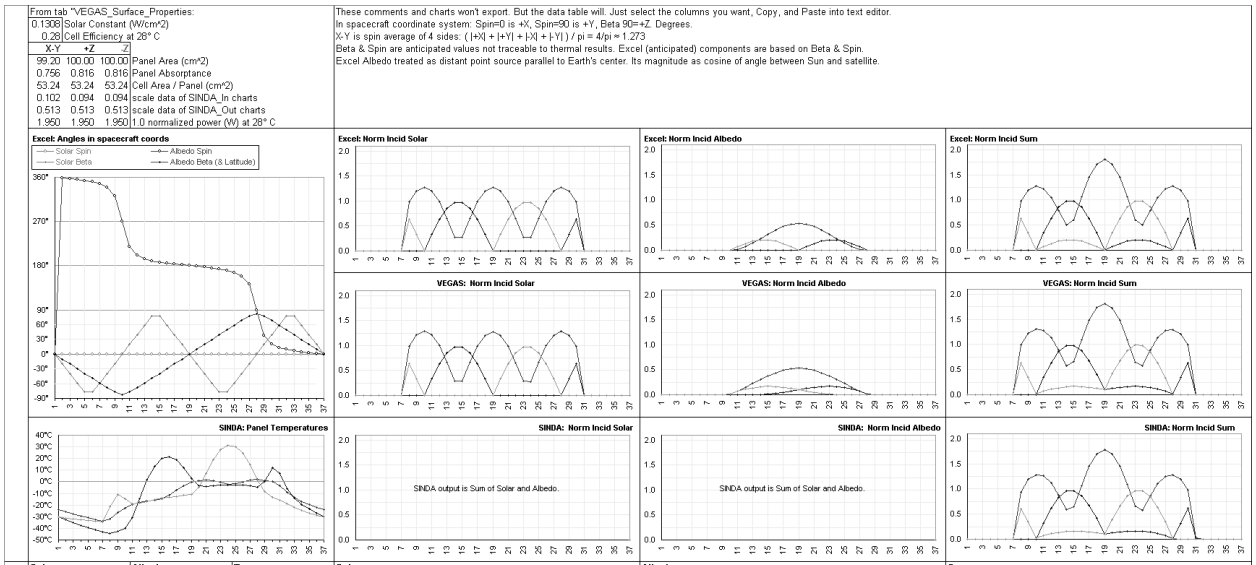

Pos.	Solar Excel Spin°	Solar Excel Beta°	|Sol|	Albedo Excel Spin°	Albedo Excel Beta°	|Alb|	Temp SINDA X-Y °C	Temp SINDA +Z °C	Temp SINDA -Z °C	Solar Excel X-Y	Solar Excel +Z	Solar Excel -Z	VEGAS X-Y	VEGAS +Z	VEGAS -Z	SINDA X-Y	SINDA +Z	SINDA -Z	Albedo Excel X-Y	Albedo Excel +Z	Albedo Excel -Z	VEGAS X-Y	VEGAS +Z	VEGAS -Z	SINDA X-Y	SINDA +Z	SINDA -Z	Sum Excel X-Y	Sum Excel +Z	Sum Excel -Z	VEGAS X-Y	VEGAS +Z	VEGAS -Z	SINDA X-Y	SINDA +Z	SINDA -Z
1	0.0	0.0	0	0.0	0.0	0	-24.0	-30.0	-30.2	0	0	0	0	0	0				0	0	0	0	0	0				0	0	0	0	0	0	0	0	0
2	0.0	-19.8	0	358.6	-9.9	0	-25.9	-32.8	-31.3	0	0	0	0	0	0				0	0	0	0	0	0				0	0	0	0	0	0	0	0	0
3	0.0	-39.5	0	357.1	-19.8	0	-27.7	-35.3	-32.1	0	0	0	0	0	0				0	0	0	0	0	0				0	0	0	0	0	0	0	0	0
4	0.0	-59.0	0	355.4	-29.7	0	-29.4	-37.6	-32.8	0	0	0	0	0	0				0	0	0	0	0	0				0	0	0	0	0	0	0	0	0
5	0.0	-77.2	0	353.3	-39.5	0	-31.0	-39.7	-33.3	0	0	0	0	0	0				0	0	0	0	0	0				0	0	0	0	0	0	0	0	0
6	0.0	-77.2	0	350.6	-49.3	0	-32.6	-41.5	-33.8	0	0	0	0	0	0				0	0	0	0	0	0				0	0	0	0	0	0	0	0	0
7	0.0	-59.0	0	346.4	-59.0	0	-34.1	-43.2	-34.2	0	0	0	0	0	0				0	0	0	0	0	0				0	0	0	0	0	0	0	0	0
8	0.0	-39.5	1	339.1	-68.5	0	-31.9	-44.2	-21.7	0.982	0	0.636	0.992	0	0.639				0	0	0	0.000	0	0.000				0.982	0	0.636	0.992	0	0.639	0.939	0	0.605
9	0.0	-19.8	1	321.7	-77.2	0	-26.5	-42.8	-10.7	1.198	0	0.339	1.216	0	0.340				0	0	0	0.002	0	0.001				1.198	0	0.339	1.218	0	0.341	1.190	0	0.344
10	0.0	0.0	1	270.0	-82.0	0.000	-22.4	-40.0	-14.8	1.273	0	0	1.289	0.001	0.001				0.000	0	0.000	0.019	0	0.012				1.273	0	0.000	1.308	0.001	0.013	1.282	0	0.026
11	0.0	19.8	1	218.3	-77.2	0.073	-19.8	-30.7	-19.1	1.198	0.339	0	1.209	0.339	0				0.021	0	0.071	0.074	0	0.068				1.219	0.339	0.071	1.283	0.339	0.068	1.262	0.323	0.067
12	0.0	39.5	1	200.9	-68.5	0.144	-17.9	-14.7	-18.6	0.982	0.636	0	0.993	0.637	0				0.067	0	0.134	0.150	0	0.114				1.050	0.636	0.134	1.143	0.637	0.114	1.128	0.615	0.113
13	0.0	59.0	1	193.6	-59.0	0.211	-16.3	1.4	-16.9	0.656	0.857	0	0.662	0.859	0				0.138	0	0.181	0.226	0.000	0.136				0.794	0.857	0.181	0.888	0.860	0.136	0.882	0.836	0.133
14	0.0	77.2	1	189.4	-49.3	0.271	-15.6	13.5	-15.2	0.282	0.975	0	0.284	0.975	0				0.225	0	0.205	0.299	0.004	0.159				0.507	0.975	0.205	0.582	0.979	0.159	0.585	0.959	0.154
15	0.0	77.2	1	186.7	-39.5	0.323	-14.5	20.0	-14.2	0.282	0.975	0	0.285	0.969	0				0.317	0	0.205	0.370	0.012	0.168				0.599	0.975	0.205	0.655	0.981	0.168	0.641	0.964	0.164
16	0.0	59.0	1	184.6	-29.7	0.365	-11.6	21.4	-13.4	0.656	0.857	0	0.661	0.849	0				0.404	0	0.181	0.435	0.026	0.164				1.059	0.857	0.181	1.096	0.875	0.164	1.062	0.867	0.159
17	0.0	39.5	1	182.9	-19.8	0.396	-7.3	18.7	-12.5	0.982	0.636	0	0.991	0.632	0				0.474	0	0.134	0.493	0.046	0.148				1.457	0.636	0.134	1.485	0.677	0.148	1.446	0.672	0.149
18	0.0	19.8	1	181.4	-9.9	0.415	-3.2	12.3	-11.6	1.198	0.339	0	1.208	0.337	0				0.520	0	0.071	0.527	0.071	0.126				1.718	0.339	0.071	1.735	0.408	0.126	1.698	0.410	0.123
19	0.0	0.0	1	180.0	0.0	0.421	-0.3	2.5	-11.1	1.273	0	0	1.280	0.001	0.001				0.536	0.000	0	0.536	0.099	0.100				1.810	0.000	0	1.816	0.100	0.100	1.780	0.108	0.097
20	0.0	-19.8	1	178.6	9.9	0.415	0.9	-3.6	-4.9	1.198	0	0.339	1.205	0	0.338				0.520	0.071	0	0.523	0.127	0.073				1.718	0.071	0.339	1.728	0.127	0.411	1.703	0.123	0.395
21	0.0	-39.5	1	177.1	19.8	0.396	1.3	-4.3	7.2	0.982	0	0.636	0.988	0	0.634				0.474	0.134	0	0.488	0.149	0.047				1.457	0.134	0.636	1.475	0.149	0.682	1.457	0.144	0.662
22	0.0	-59.0	1	175.4	29.7	0.365	0.9	-3.5	19.2	0.656	0	0.857	0.659	0	0.858				0.404	0.181	0	0.436	0.162	0.027				1.059	0.181	0.857	1.095	0.162	0.884	1.087	0.159	0.862
23	0.0	-77.2	1	173.3	39.5	0.323	-0.6	-2.7	27.8	0.282	0	0.975	0.284	0	0.976				0.317	0.205	0	0.370	0.168	0.012				0.599	0.205	0.975	0.654	0.168	0.988	0.656	0.164	0.969
24	0.0	-77.2	1	170.6	49.3	0.271	-2.0	-2.7	31.3	0.282	0	0.975	0.282	0	0.974				0.225	0.205	0	0.299	0.159	0.004				0.507	0.205	0.975	0.581	0.159	0.977	0.574	0.154	0.959
25	0.0	-59.0	1	166.4	59.0	0.211	-1.8	-3.1	30.0	0.656	0	0.857	0.662	0	0.855				0.138	0.181	0	0.225	0.138	0.000				0.794	0.181	0.857	0.886	0.138	0.856	0.862	0.138	0.846
26	0.0	-39.5	1	159.1	68.5	0.144	-0.2	-3.1	24.4	0.982	0	0.636	0.992	0	0.635				0.067	0.134	0	0.150	0.114	0				1.050	0.134	0.636	1.142	0.114	0.635	1.113	0.113	0.631
27	0.0	-19.8	1	141.7	77.2	0.073	1.4	-3.3	14.7	1.198	0	0.339	1.207	0	0.337				0.021	0.071	0	0.073	0.068	0				1.219	0.071	0.339	1.280	0.068	0.337	1.251	0.067	0.344
28	0.0	0.0	1	90.0	82.0	0.000	1.9	-4.4	1.3	1.273	0	0	1.282	0.001	0.001				0.000	0.000	0	0.019	0.012	0				1.273	0.000	0	1.301	0.013	0.001	1.277	0.015	0.015
29	0.0	19.8	1	38.3	77.2	0	1.2	0.4	-8.7	1.198	0.339	0	1.208	0.339	0				0	0	0	0.002	0.001	0				1.198	0.339	0	1.209	0.339	0	1.190	0.323	0
30	0.0	39.5	1	20.9	68.5	0	0.3	11.8	-13.2	0.982	0.636	0	0.988	0.636	0				0	0	0	0.000	0.000	0				0.982	0.636	0	0.988	0.636	0	0.980	0.615	0
31	0.0	59.0	0	13.6	59.0	0	-3.5	7.2	-15.8	0	0	0	0	0	0				0	0	0	0	0	0				0	0	0	0	0	0	0.036	0.021	0
32	0.0	77.2	0	9.4	49.3	0	-9.3	-6.0	-18.9	0	0	0	0	0	0				0	0	0	0	0	0				0	0	0	0	0	0	0	0	0
33	0.0	77.2	0	6.7	39.5	0	-13.6	-13.8	-22.1	0	0	0	0	0	0				0	0	0	0	0	0				0	0	0	0	0	0	0	0	0
34	0.0	59.0	0	4.6	29.7	0	-16.9	-19.3	-24.8	0	0	0	0	0	0				0	0	0	0	0	0				0	0	0	0	0	0	0	0	0
35	0.0	39.5	0	2.9	19.8	0	-19.7	-23.5	-27.1	0	0	0	0	0	0				0	0	0	0	0	0				0	0	0	0	0	0	0	0	0
36	0.0	19.8	0	1.4	9.9	0	-22.0	-27.0	-28.8	0	0	0	0	0	0				0	0	0	0	0	0				0	0	0	0	0	0	0	0	0

Figure 14 Screen Capture of Excel tool's "Incident_Power_export" worksheet

Conclusion

To this day, I still can't specify orbit positions using a "master" equation without intermediate calculations. The solution is far from elegant and efficient. However, the method does follow a logical path and the intermediate calculations are simple enough to implement.

The spreadsheet has proven useful to myself, and toward the thermal and power analyses of Fox 1. In fact, it has been used to help defined the specific parameters to use for hot and cold thermal cases. It is a tool that continues to see improvement. It is planned that this tool will be modified to handle the deployable panels of Fox 2. Future work may also include implementing eccentricity (it's currently only positions on a circle).

Spacecraft Systems Integration Team
AMSAT NextGEN Program

Design Group 08

Kirstie Caesar, ME
Joseph Gilley, CoE
Michael Swift, EE

Faculty Advisor: Professor Kurt Rogers
Sponsor: Radio Amateur Satellite Corporation (AMSAT)

May 13, 2011

Submitted in partial fulfillment of the requirements of ME 494/EECE 488
in the Spring Semester of 2011.

Thomas J. Watson School of Engineering and Applied Science
State University of New York at Binghamton

ABSTRACT

The Fox satellite is the first 1U CubeSat being developed by the Radio Amateur Satellite Corporation (AMSAT). The main objective of the satellite is to provide the capability for amateur FM communications and to serve as a platform for future 1U development. The functionality of the Fox satellite depends upon several subsystems working together in unison. For simplification of development and modularity, the creation of the overall CubeSat system was spread out among multiple design teams, each with the responsibility of creating a single subsystem.

The Spacecraft Systems Integration Team has the responsibility of interfacing the subsystems comprising the Fox satellite together into a functioning unit. The integration has focused on providing system uniformity and a common communication protocol and overall architecture. The integration team has verified designs, both mechanical and electrical, for completeness and correctness. The team has also overseen the implementation of the designed systems following the preliminary design review in December 2010. Finally, the integration team has worked to ensure that all major system requirements specified by AMSAT and the CubeSat standard have been incorporated into the final product.

The focus of the current semester has been shifting from the design and analysis phase to the final implementation and testing phase. The design teams have worked to produce complete engineering models of the systems and thoroughly test the functionality. Multiple integration tests have been performed to verify system to system interfaces and adherence to the overall design structure. Currently, significant progress has been made by each subsystem toward full completion

1.0 INTRODUCTION

1.1. Background

Throughout its history, the Radio Amateur Satellite Corporation (AMSAT) has been known for developing and launching innovative space satellites for experimentation and communication. AMSAT is a non-profit organization that benefits from the contributions of volunteers and students interested in space technologies. This partnership has helped to launch approximately 30 satellites over AMSAT's 25 year existence. AMSAT continues to seek student involvement and has made this concept a key component of their overall mission. (Radio Amateur Satellite Corporation, 2010)

Recently, AMSAT has decided to pursue a new type of satellite development – the 1U CubeSat. AMSAT has declared that their first 1U CubeSat will be the Fox satellite. In accordance with their mission of fostering student interest in space, AMSAT has reached out to the Watson School at Binghamton University for assistance in developing the major components of the Fox satellite.

1.2. Scope

As defined by the California Polytechnic State University (CALPOLY) CubeSat Standard, a 1U CubeSat is a 10 cm X 10 cm X 10 cm cubic structure not exceeding more than 1 kg in mass. The small size allows for the development of a space ready satellite at reduced cost with more frequent launch opportunities. This, however, often results in a trade-off in which overall satellite functionality is compromised due to the mass and volume constraints. The Fox satellite looks to override the functionality compromise despite the constraints.

The primary mission of the Fox CubeSat is to provide amateur FM communication with both ground stations and fellow satellites. The Fox satellite is also expected to harbor a scientific payload. In addition, AMSAT hopes to use the completed Fox satellite as a platform for future 1U CubeSats. (Radio Amateur Satellite Corporation, 2010)

The AMSAT Fox satellite can be partitioned into several subsystems, each necessary for operation. These systems include the power supply, the attitude determination and control, the command and data handling, the antennas, the solar panels and physical structure, and the radio frequency receiver and transmitter. A separate design team has been assigned to developing and testing each of the CubeSat subsystems with the exception of the radio frequency system, which will be created by AMSAT.

In order to coordinate development between the individual design teams, an integration team has also been assembled. Along with providing technical support to the design teams, the integration team has also worked to manage the system wide requirements, develop system level architectures, oversee testing, and provide interfacing support for the subsystems. The integration team has also been responsible for customer-project interfacing.

1.3. Objective

The current semester has focused upon transitioning from the design and prototyping phase to full-scale implementation in an attempt to develop an engineering model for each subsystem.

Each model would ideally provide all of the desired functionality for the system, but at least meet all of the major requirements. Building upon the completed models, the integration team would then bring multiple systems together for higher level testing.

The major requirements for the integration team can be found below in **Table 1.1**.

Requirement Number	Requirement
1	Shall design, develop and implement, and test the electrical framework for the CubeSat model
2	Shall utilize the electrical system to create a communication architecture responsible for controlling the semi-autonomous functionality of the CubeSat by interfacing with the subsystems
3	Shall design and develop the overall structure of the CubeSat responsible for housing all components. The structure must meet all CubeSat specifications. The housing must not interfere with component operation..
4	Shall design around the concept of modularity in order to provide a template/platform for future development and advancement

Table 1.1: Spacecraft Systems Integration Team Requirements

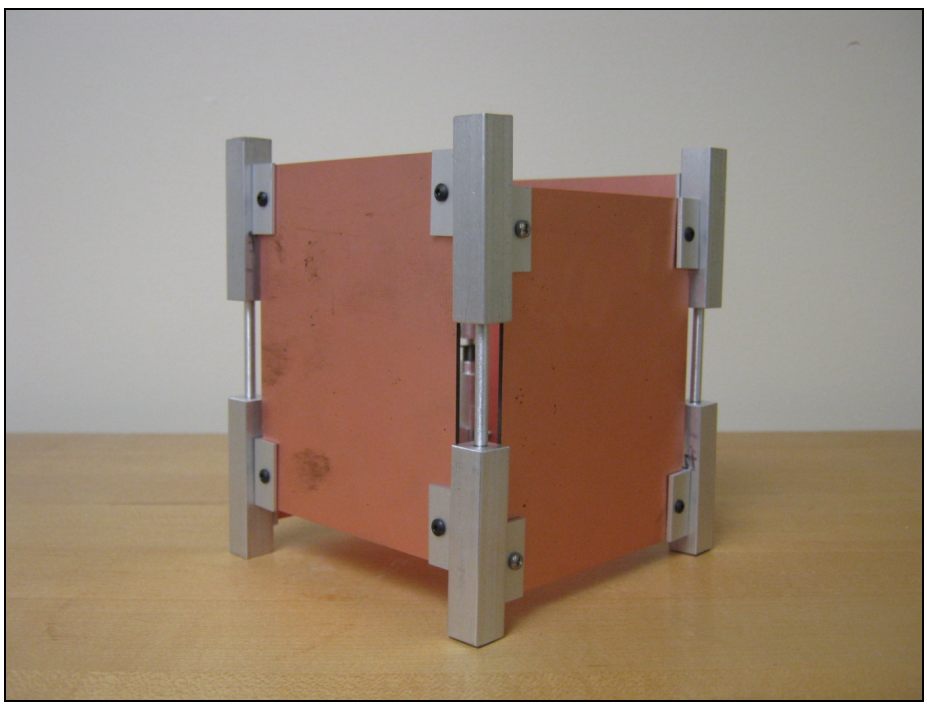

Figure 1.1: AMSAT Fox CubeSat

2.0 Satellite Electrical System Integration

The Electrical System encompasses all of the system interfaces for the CubeSat. The electrical system has the responsibility of providing power and signal "highways". The system must effectively distribute power to all components of the CubeSat and route the communication network. The Electrical System provides an underlying foundation for all CubeSat functionality.

2.1. Power Input

The input power source for the CubeSat when in space will be solar radiation absorbed by the solar panels. The CubeSat configuration has been designed to incorporate as many solar panels as possible in order to maximize the total amount of power absorbed. The current design contains 14 solar panel locations. These locations can be seen in Figure 2.1. Solar panels will be placed on the four walls of the structure, the top and bottom, as well as on deployable panels.

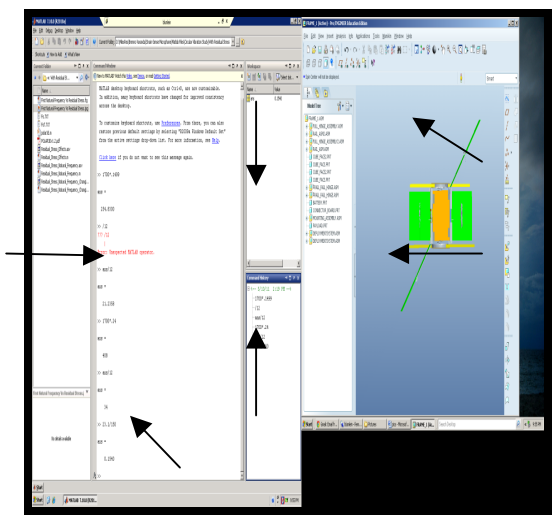

Figure 2.1: Solar Panel Locations

Each of the 14 solar panel locations will consist of two solar cells. As seen in **Figure 2.2**, the solar cells will be connected in series. This will result in an output voltage in the range of 0 to 5.2 V and a maximum current output of up to approximately 900 mA. Each solar panel will be connected in parallel to the other solar panels. This is necessary to prevent current flowing through un-illuminated panels. Current flowing through un-illuminated cells can cause permanent damage. The solar cell Voltage-Current (VI) curve, along with the type of solar cell can be found in the report created by MDP 05. (Team M. 0., 2011)

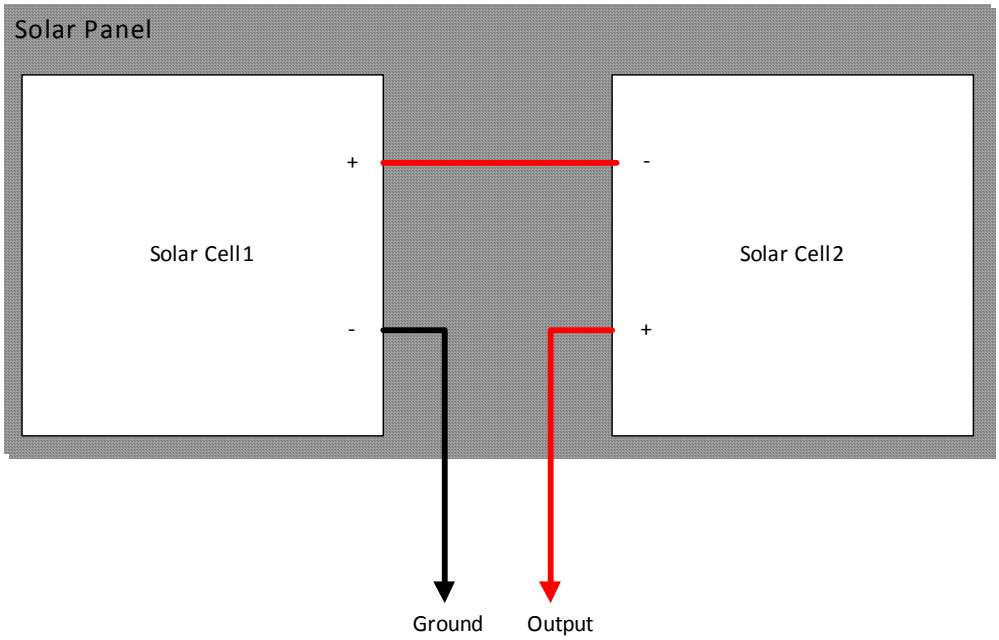

Figure 2.2: Solar Cell Connectivity

Based upon the orbital dynamics of the CubeSat polar orbit (5804 second period, 60000 meters in altitude), the number of solar panels, and the location of the solar panels, an approximate power absorption curve was created by the Power Generation and Distribution team. Power absorption curves for the stowed and deployed solar panel configurations for a typical rotation about the Earth can be seen in **Figure 2.3** and **Figure 2.4**.

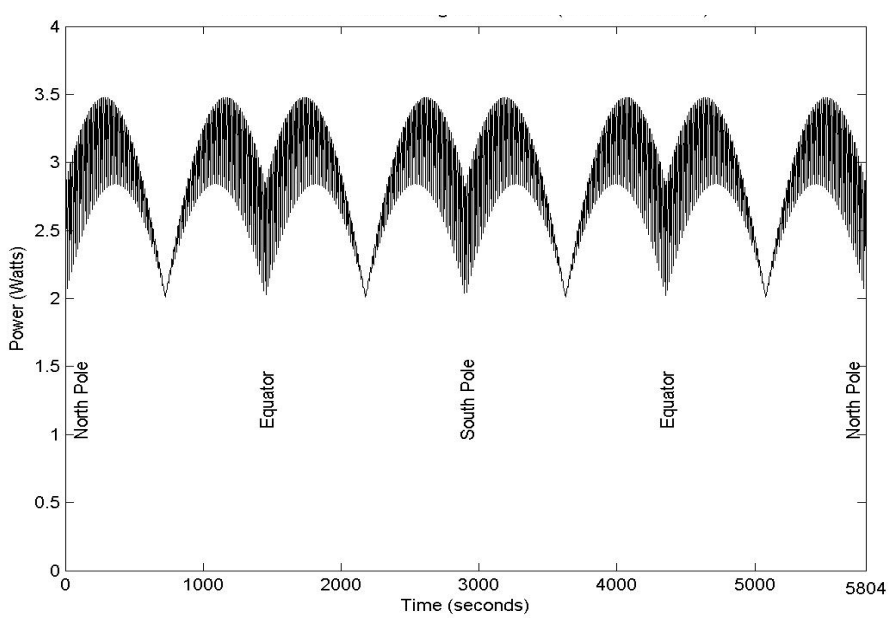

Figure 2.3: Power Absorption Curve for Stowed Solar Panel Configuration

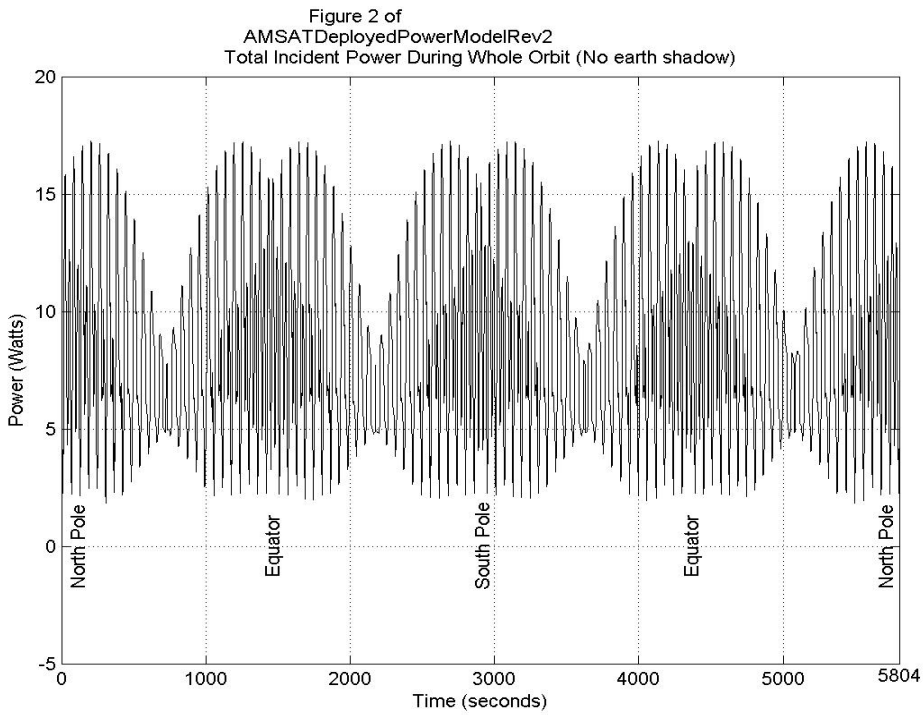

Figure 2.4: Power Absorption Curve for Deployed Solar Panel Configuration

As can be seen, the amount of power available to the CubeSat during the stowed solar panel configuration is greatly lower than the amount for the deployed solar panel configuration. The reason for this is twofold. First, in the stowed configuration, several of the solar panels do not have access to sunlight. Second, the deployed configuration has a much larger surface area on which to absorb sunlight.

By integrating the above power curves, an estimate of the total energy absorption can be calculated per orbit. Table 2.1 summarizes the power input range to the CubeSat based upon the deployment status of the solar panels.

Configuration	**Incident Energy (J)**	**Nominal Power (W)**	**Max Power (W)**	**Min Power (W)**
Stowed	16872.47	2.01	3.48	2.01
Deployed	49746.26	5.92	17.25	1.82

Table 2.1: CubeSat Power Absorption per Rotation

Once absorbed, the input power is regulated to 5 V and 3.3 V levels and is distributed as necessary to the other CubeSat systems. Excess power is stored in the battery for use during the eclipse portion of the orbit.

2.2. Power Distribution

The designed power and distribution system following the preliminary design review in December 2010 is shown in **Figure 2.5**. The figure shows that the Power Generation and Distribution System will output two bus voltages for use by the other systems.

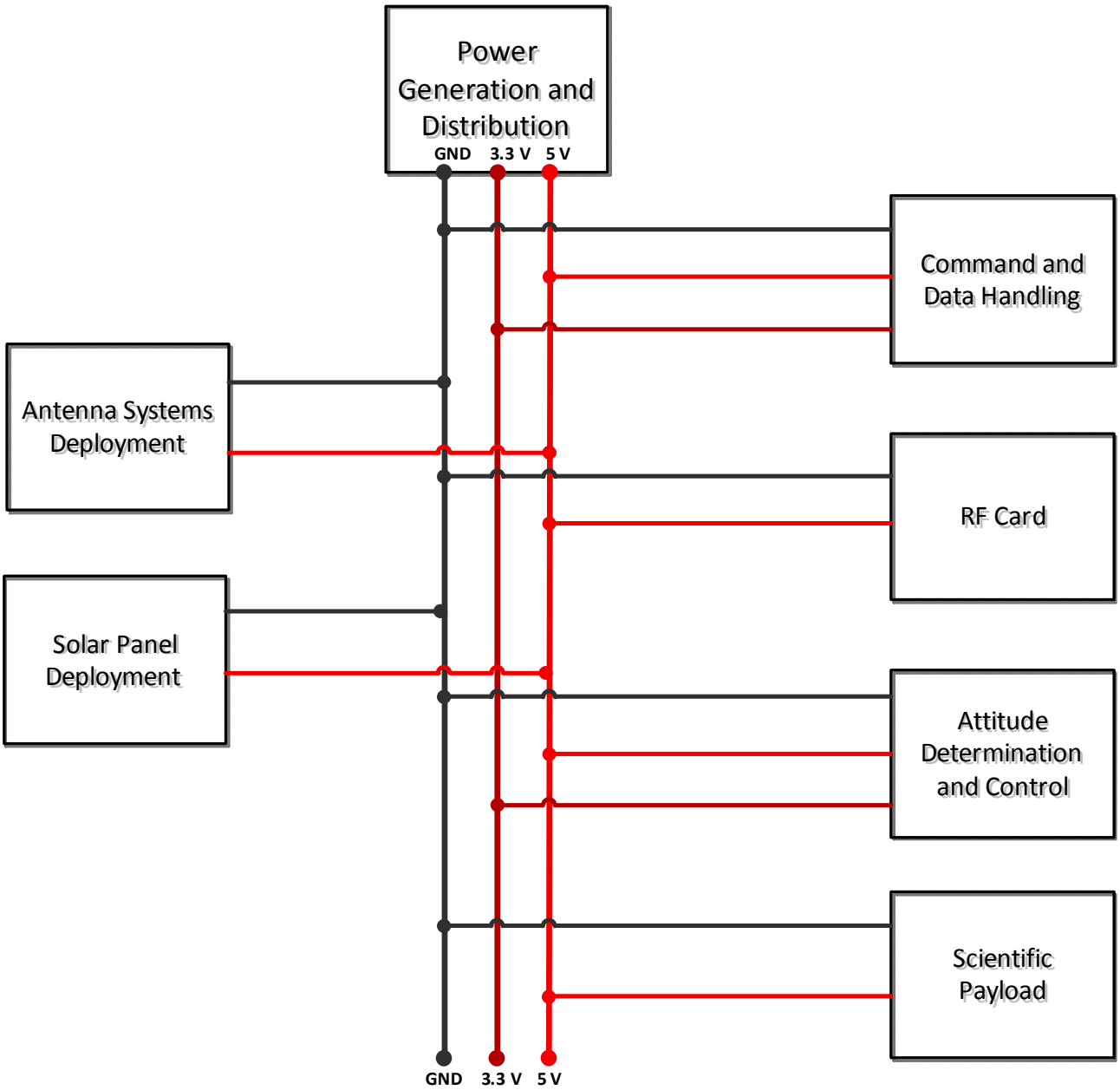

Figure 2.5: AMSAT Fox High Level Electrical System

The diagram has since been updated to include more detail concerning the control for the power distribution. The updated diagram is shown in **Figure 2.6**.

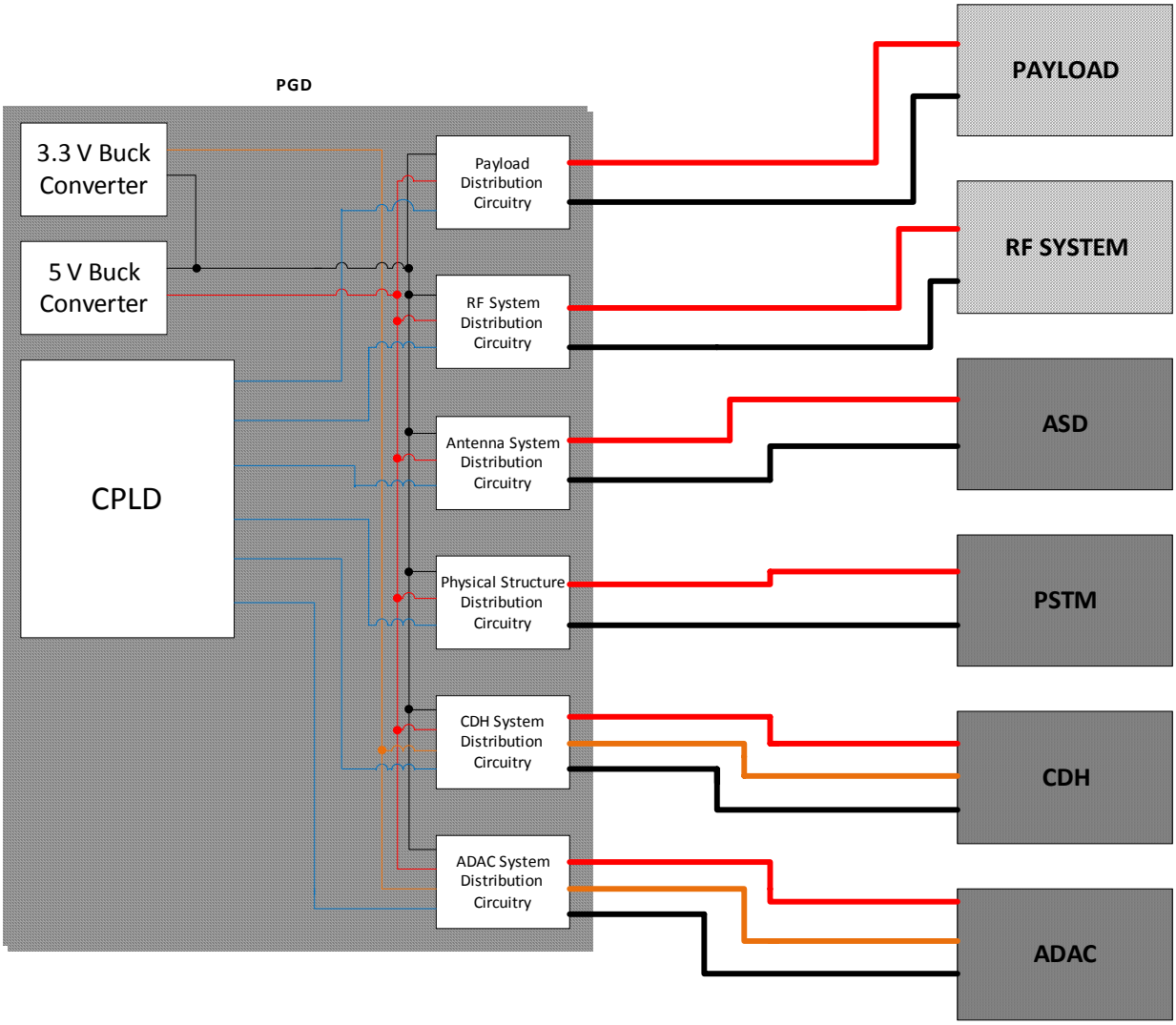

Figure 2.6: AMSAT Fox Power Distribution Diagram

In the figure, the orange lines represent 3.3 V, the red lines represent 5 V, the black lines represent the reference voltage, and the blue lines represent the control lines. For the connecting systems, the dark shading indicates components designed by the Watson School.

The control functionality for the power distribution is administered by the programmable chip in the Power Generation and Distribution System. The complex programmable logic device (CPLD) contains an output port for each of the other subsystems in the CubeSat. These control lines determine when power is sent to a particular subsystem. This design allows for power management by giving the CubeSat system the ability to selectively turn off subsystems if battery power is running low. It also ensures that power will not be sent to the deployment mechanisms until desired.

2.2.1. Power Consumption

Power availability is one of the major limiting factors for the CubeSat. The system must absorb and store enough power during each rotation about the Earth to prevent shutdown during the

eclipsed portion of the orbit. As mentioned previously, the CubeSat will have a nominal power of 5.92 W per orbit under normal conditions when the solar panels are deployed. If system demand exceeds this amount, functionality will be compromised as some systems will have to be turned off.

All CubeSat systems will require power for operation during at least one point in time. The antenna deployment and solar panel deployment are one-time power usages, as once deployment occurs, it will not have to be re-performed. Tests and analysis have been performed to produce power consumption estimates for the antenna deployment. Solar panel deployment has yet to be tested.

Table 2.2 summarizes the expected power and energy usage for deployment. Based on the test results provided in section 5.0, deployment will take approximately 1 second once power is applied. This will require around 6 J. Because there is a required delay between launch and antenna deployment, the system will be able to store this amount of energy before deployment initiation.

Structure	**Max Power (W)**	**Estimated Energy (J)**
Antennas	5.56 W	5.56 J
Solar Panels	N/A	N/A

Table 2.2: Deployment Power Consumption

The remaining CubeSat systems will require power during either all or part of an orbital cycle. Through analysis of the systems, en estimate was generated concerning the nominal power requirements.

Table 2.3 summarizes the power demand by these subsystems. The table assumes that each system is on for the full duration of the orbit.

Subsystem	**Nominal Power (W)**	**Nominal Energy (J)**
ADAC	0.1 W	581 J
CDH	1.2 W	6965 J
PGD	1.0 W	5804 J
RF	0.5 W	2902 J
Payload	1.0 W	5804 J
Total	**3.8 W**	**22056 J**

Table 2.3: Power Consumption by Subsystem per Orbit

Based on the table, it can be seen that with the solar panels fully deployed, the CubeSat will be able to meet the power demand of its systems. These numbers do not include the power estimates for the programmable logic device on the systems. It is expected that it will be a very low power device. There are approximately 2.1 W unused per orbit from which the CPLDs can be powered.

The power estimates also do not include take into consideration the power needed to flip the CubeSat. Flipping the CubeSat is expected to require 5 W of power based on tests performed by the Attitude Determination and Control Team. This, however, would only need to be applied for

a short duration in order to polarize the magnetorquer. Assuming that the magnetorquer will not be used frequently, the system should be able to handle the demand by utilizing stored energy.

Based on the current figures and assuming that the solar panels deploy properly, the CubeSat will be able to provide power to all of the systems without having to shutdown any functionality.

2.3. Signal Interfacing

In order for the CubeSat to provide the desired functionality, the individual subsystems must interface properly. The operation of each particular system depends on input signals from other subsystems. The following tables list the input and output signals for each of the CubeSat systems.

Signal Name	Input/Output	Interfacing System	Function/Description
ADAC_5V_PWR	Output	Attitude Determination and Control	5 V Output power to ADAC
ADAC_3V_PWR	Output	Attitude Determination and Control	3.3 V Output power to ADAC
ADAC_GND_PWR	Output	Attitude Determination and Control	Ground reference to ADAC
CDH_5V_PWR	Output	Command and Data Handling	5 V Output to CDH
CDH_3V_PWR	Output	Command and Data Handling	3.3 V Output to CDH
CDH_GND_PWR	Output	Command and Data Handling	Ground reference to CDH
ASD_5V_PWR	Output	Antenna Systems Design and Deployment	5 V Output to ASD
ASD_GND_PWR	Output	Antenna Systems Design and Deployment	Ground reference to ASD
PSTM_5V_PWR	Output	Physical Structure and Thermal Model	5 V Output to PSTM for solar panel deployment
PSTM_GND_PWR	Output	Physical Structure and Thermal Model	Ground reference to PSTM
RF_5V_PWR	Output	RF Card	5 V Output to RF
RF_GND_PWR	Output	RF Card	Ground reference to RF
PYLD_5V_PWR	Output	Scientific Payload	5 V Output to Payload
PYLD_GND_PWR	Output	Scientific Payload	Ground reference to Payload
SCL_1	Input	Command and Data Handling	I2C Serial Clock Line
SDA_1	Input, Output	Command and Data Handling	I2C Serial Data Line
PPOD_TX	Input, Output	PPOD, Command and Data Handling	External PPOD Serial Transmit
PPOD_RX	Input, Output	PPOD, Command and Data Handling	External PPOD Serial Receive
PPOD_PWR	Input	PPOD	External PPOD Power
SP_PWR	Input	Solar Panels	Solar Panel Power

Table 2.4: Power Generation and Distribution System I/O

Signal Name	Input/Output	Interfacing System	Function/Description
ADAC_5V_PWR	Input	Power Generation and Distribution	5 V Power from PGD
ADAC_3V_PWR	Input	Power Generation and Distribution	3.3 V Power from PGD
ADAC_GND_PWR	Input	Power Generation and Distribution	Ground reference from PGD
SCL_1	Input	Command and Data Handling	Serial Clock Line
SDA_1	Input, Output	Command and Data Handling	Serial Data Line

Table 2.5: Attitude Determination and Control System I/O

Signal Name	Input/Output	Interfacing System	Function/Description
CDH_5V_PWR	Input	Power Generation and Distribution	5 V Power from PGD
CDH_3V_PWR	Input	Power Generation and Distribution	3.3 V Power from PGD
CDH_GND_PWR	Input	Power Generation and Distribution	Ground reference from PGD
SCL_1	Output	Power Generation and Distribution, Attitude Determination and Control, RF Card	Serial Clock Line
SDA_1	Input, Output	Power Generation and Distribution, Attitude Determination and Control, RF Card	Serial Data Line
Audio_in	Output	RF Card	Audio signal to RF
Audio_out	Input	RF Card	Audio signal from RF
SCL_2	Output	Scientific Payload	Serial Clock Line
SDA_2	Input, Output	Scientific Payload	Serial Data Line
PYLD_REF_CLK	Output	Scientific Payload	10 MHz reference clock

Table 2.6: Command and Data Handling System I/O

Signal Name	Input/Output	Interfacing System	Function/Description
ASD_5V_PWR	Input	Power Generation and Distribution	5 V Power from PGD
ASD_GND_PWR	Input	Power Generation and Distribution	Ground reference from PGD

Table 2.7: Antenna System Design and Deployment System I/O

Signal Name	Input/Output	Interfacing System	Function/Description
PSTM_5V_PWR	Input	Power Generation and Distribution	5 V Power from PGD
PSTM_GND_PWR	Input	Power Generation and Distribution	Ground reference from PGD

Table 2.8: Physical Structure and Thermal Model System I/O

Signal Name	Input/Output	Interfacing System	Function/Description
RF_5V_PWR	Input	Power Generation and Distribution	5 V Power from PGD
RF_GND_PWR	Input	Power Generation and Distribution	Ground reference from PGD
SCL_1	Input	Command and Data Handling	Serial Clock Line
SDA_1	Input, Output	Command and Data Handling	Serial Data Line
Audio_in	Input	Command and Data Handling	Signal to be converted to RF
Audio_out	Output	Command and Data Handling	Converted RF Signal
RF_in	Input	Antenna Systems Design and Deployment	Received RF from Antennas
RF_out	Output	Antenna Systems Design and Deployment	RF to be transmitted by Antennas

Table 2.9: RF System I/O

Signal Name	Input/Output	Interfacing System	Function/Description
PYLD_5V_PWR	Input	Power Generation and Distribution	5 V Power from PGD
PYLD_GND_PWR	Input	Power Generation and Distribution	Ground reference from PGD
PYLD_REF_CLK	Input	Command and Data Handling	10 MHz reference clock
SCL_2	Input	Command and Data Handling	Serial Clock Line
SDA_2	Input, Output	Command and Data Handling	Serial Data Line

Table 2.10: Payload System I/O

There are a total of 52 interfaces that must occur between all system components. This must be done in an efficient manner in order to meet the mass and volume requirements of the CubeSat.

2.4. Electrical Integration

A high level view of the signal and power flow throughout the system is represented by the diagram shown in **Figure 2.7**. The power links will flow to each system to allow for operation. The communication links will provide commands and data flow.

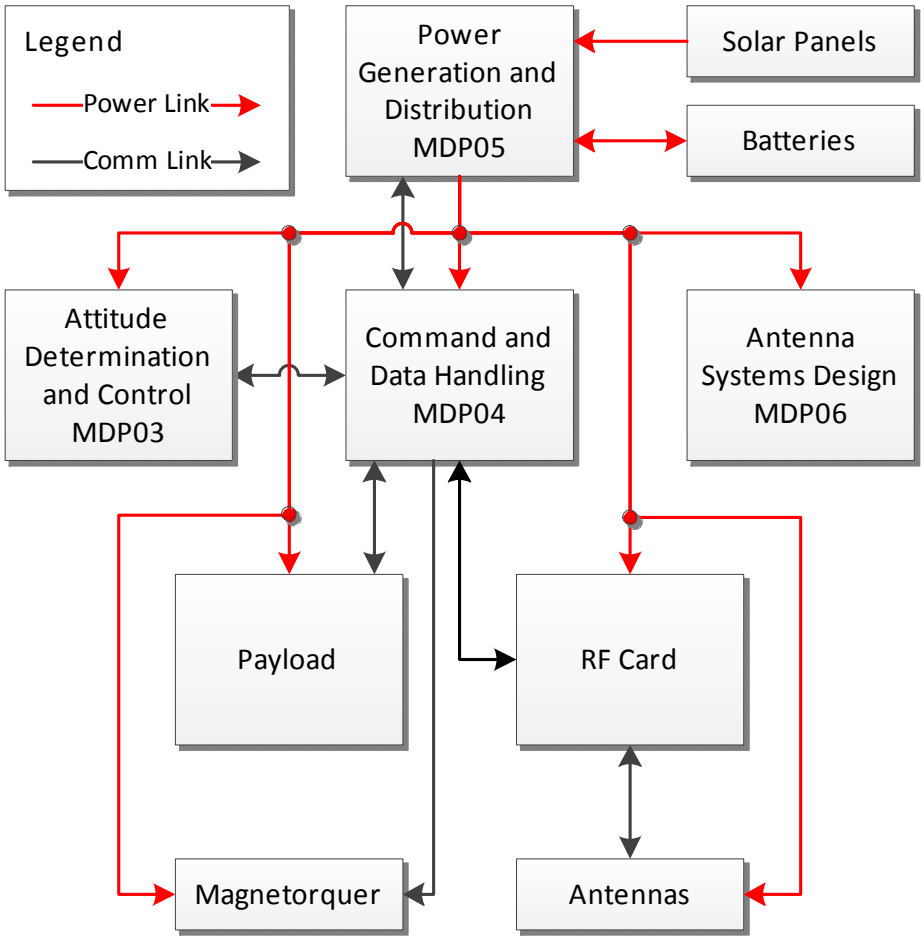

Figure 2.7: AMSAT Fox Power and Signal Routing Diagram

One of the specific tasks for the Integration Team is to incorporate the power and signal routing diagram into the actual CubeSat.

2.4.1. Backplane Board

The overall functionality of the Fox CubeSat relies upon the individual units interfacing reliably. After much consideration concerning the implementation of the electrical system, it was concluded that a separate printed circuit board dedicated solely to power and signal routing would provide the best method.

The addition of the backplane board greatly reduces the number of interface connections in the CubeSat. This is anticipated to have the advantage of greater reliability. Because the CubeSat cannot be operated on once launched, good connections will be vital to the success of the mission. Reducing the number of connections will decrease the probability of disconnections during launch and orbit.

The backplane board will be a 4-layer PCB. The two outer layers will be used for signal routing. The first inner layer will be used for power routing between the Power Generation and Distribution System and the other systems. The second inner layer will be a ground plane used for providing the reference voltage and as a return path for current.

The backplane board will be placed perpendicular to the subsystem printed circuit boards in the CubeSat. A model showing the placement of the backplane board in the CubeSat internal layout can be seen in Figure 2.8.

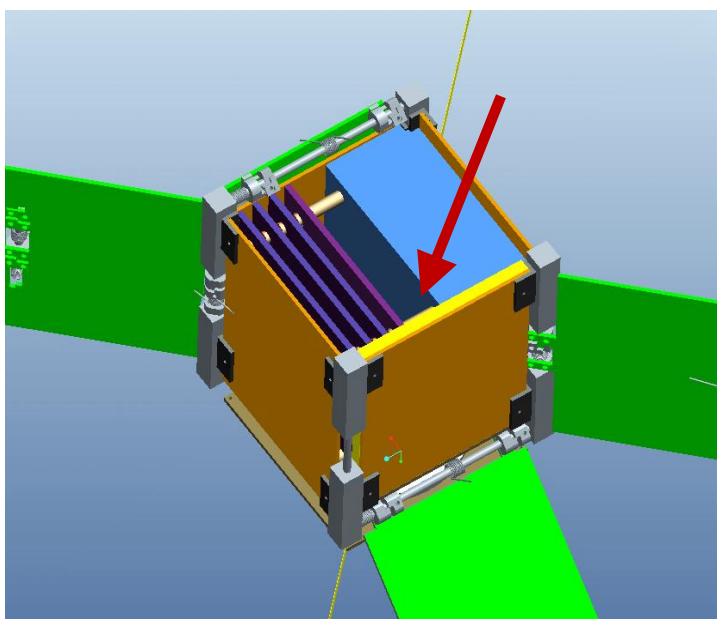

Figure 2.8: Backplane Board Placement

The yellow board in the above figure represents the backplane board. The backplane board will be mounted flush against the wall of the CubeSat structure. Each of the subsystems will be placed orthogonal to the backplane board. Each of the systems will contain a connector

responsible for the particular input and output signals. The backplane board will have the mating connector for each system mounted to its surface.

2.4.1.1. Choice of Connectors

The connectors selected for the backplane board were chosen due to their specific operating characteristics. The connectors had to provide the ability to handle the appropriate voltage and current levels, operate properly in the temperature conditions found in the expected orbit, and also fit within the volume constraints imposed by the CubeSat Standard.

Three different types of connectors were used in the conceptual design of the backplane board. The connector for the Power Generation and Distribution System is unique due to the large number of power outputs. The Attitude Determination and Control System, Command and Data Handling System, RF Card, and Payload System all have the same type of connector, selected based on the number of power inputs to the system and total signal I/O. The third connector was chosen specifically for the Antenna System and Solar Panel System based on power.

The first two connectors are from the EXTreme LPHPower family. These provide both power and signal connections. They are also extremely low profile, which is important due to the CubeSat mass and volume constraints. The third connector will come from either the MINI-FIT BMI or MINI-FIT SR. family. This connector offers the desired number of contacts while meeting the overall power and temperature requirements necessary for the connectors.

Connector #	Manufacturer	Part Number	Dimensions (mm)	Mounting Type	Mounting Orientation
1	Molex	46114-1017	73.88 x 8.33 x 15.21	Through Hole	Vertical
2	Molex	46114-4160	25.88 x 8.33 x 15.21	Through Hole	Vertical
3	Molex	TBD	TBD	Through Hole	Vertical

Table 2.11: Connector Details

2.4.1.2. Electrical System Model

Figure 2.9 shows the system-level CubeSat electrical configuration with the addition of the backplane board. For simplicity, all power flow is shown in red. The power arrows in this diagram also include the ground reference. The blue lines show the flow of signals for a particular subsystem.

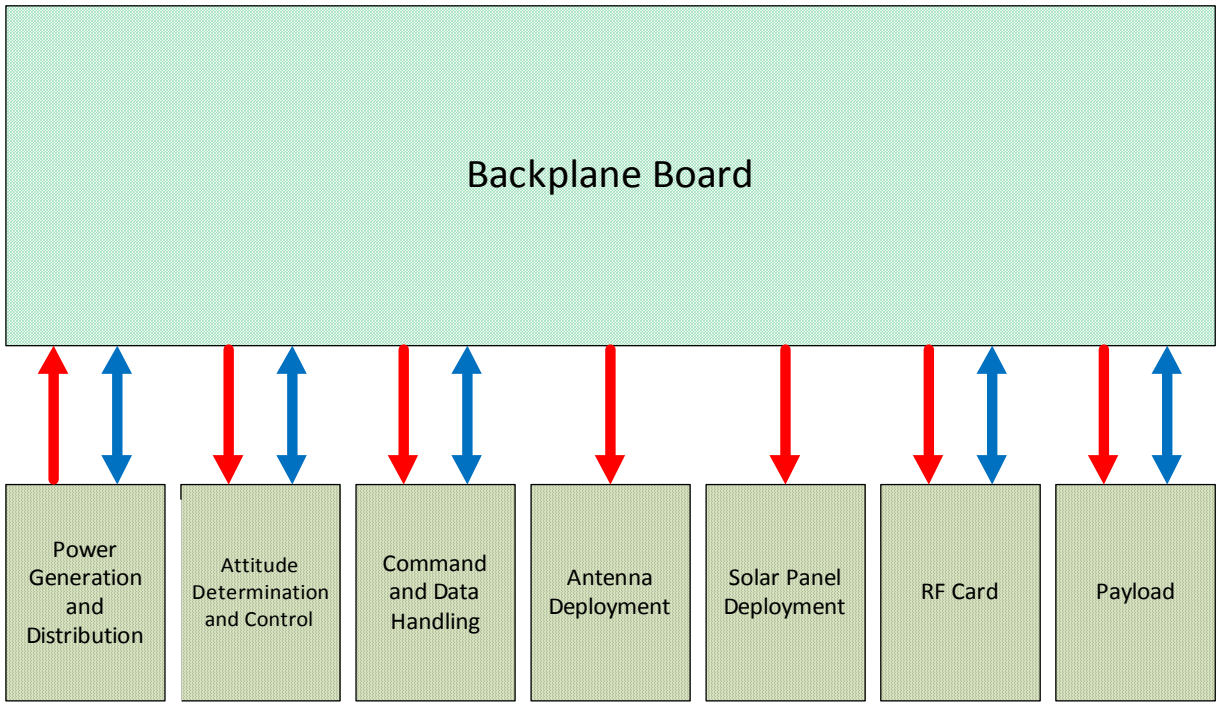

Figure 2.9: AMSAT Fox Electrical System with Backplane Board

The simplicity provided by the backplane board is apparent. Each subsystem only requires one connector and, thus, one interface location. The backplane board acts as the power and signal "highway" of the system.

2.5. Electrical System Summary

The designed electrical system meets all of the necessary requirements. The system has the ability to regulate and distribute the absorbed solar power to the various systems of the CubeSat. Most importantly, the system contains the ability to control this flow of power and also provides a simplistic method of system interfacing.

Overall, the CubeSat electrical system provides the essential framework for system-wide functionality. The communication system builds on this framework by utilizing the system interfacing to control operation and transport data.

3.0 Satellite Communication Architecture and Protocol

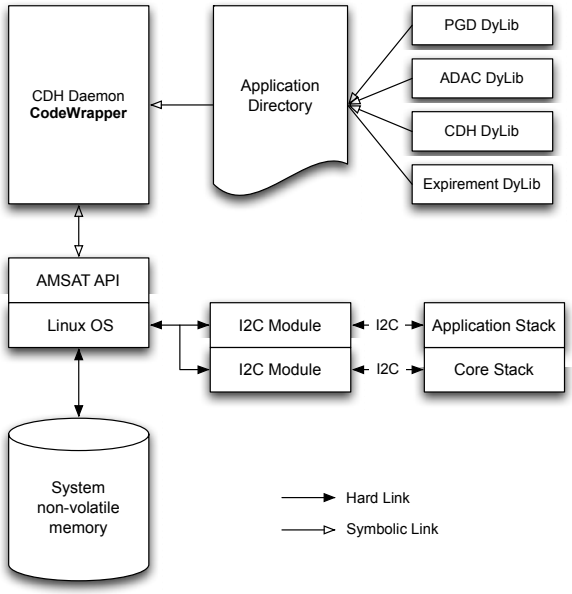

Figure 3.1: High Level Communication Block Diagram

The communication structure is designed to create a solid foundation for the core system applications. Furthermore, it is developed with third parties in mind. Specifically, the communication structure is open to additional applications that follow a protocol to provide that application a share of the core system's resources.

Sharing resources creates a more efficient system by lessening redundant hardware, thus saving power. Segregation of the core system functions from third-party applications creates a safety net surrounding the main systems functionality from any possible faulty code or hardware. Additionally, it aides the third-party developers by not including the complexity of maintaining the tasks required to operate a satellite, ultimately allowing the developer to focus solely on the implementation of the experiment.

3.1. Application Structure

Core Stack
RF Application
PGD Application
ADAC Application
CDH Application

Table 3.1: List of Core Stack Applications

Physically, there is little difference between the core system applications and third-party applications. CodeWrapper executes each application without discrimination. Conceptually, a

core application is an application that lives in the core stack as seen in **Figure 3.1** and listed in **Table 3.1**. A third-party application resides in the application stack.

3.1.1. Segregation

A different physical I2C Module within the ARM chip segregates the core system from third-party applications. However, each main function within the core system is segregated and treated as an individual application as well. **Figure 3.1** shows the system's core application software separated by function into dynamic libraries. This facet yields numerous advantages; the most important is smooth team specific development and integration. Dynamic libraries, assuming provisions for this feature is implemented in CodeWrapper, also have the ability of being updated in the field.

3.1.2. Integration

The unifying application, CodeWrapper, uses the application directory to look up these dynamic libraries then loads and executes them on the fly, as seen in **Figure 3.1**. CodeWrapper will load and execute each dynamic library location and function call entry, respectively, in the application directory. This creates a dynamic, changeable, and very scalable platform onto which arbitrary applications and changes can be made. CodeWrapper can be viewed as the manager of operations within the satellite; it takes orders from the ground, distributes resources, and oversees an application's executions.

3.2. AMSAT API

The AMSAT API is a simple library of functions to abstract the applications from the hardware. It is possible, and likely, that the hardware on which the prototype is built will change. Without abstraction from the hardware, the entire high level code base will have to be refactored to reflect this change.

3.3. Application Hardware Modules

Each application may have a discrete PCB, or application hardware, associated with the software. If there is application hardware, then it must implement a Communication Hub, as described in 3.3.1. Implementing a Communication Hub is mandatory in order for any software, including the application associated with it, to access the information being gathered or generated.

3.3.1. Communication Hub Structure

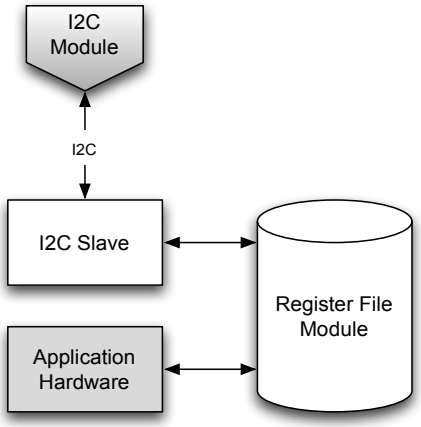

Figure 3.2: Communication Hub Structure Diagram

There shall be a common CPLD on each application board, with a common communication hub implementation consisting of an I2C slave and Register File Module (RFM), both seen in **Figure 3.2**. Each team will then develop logic to organize the hardware's data and store the information in the RFM, referred to or contained in Application Hardware, also seen in **Figure 3.2**. The RFM acts as a common platform for communication between application and hardware. Data and commands will be transferred to and from the RFM, thereby unifying the communication structure across all teams.

4.0 Satellite Mechanical Integration

4.1. CubeSat Configuration

4.1.1. Internal Layout

The current layout of the CubeSat is based around the available space inside the CubeSat as well as heat dissipation efficiency for all components. Another factor accounted for during layout was the center of gravity of the CubeSat. It was necessary for the center of gravity of the overall system to be within a 2 cm radius from the geometric center. A visual representation of the CubeSat layout can be seen below in Figure 4.1.

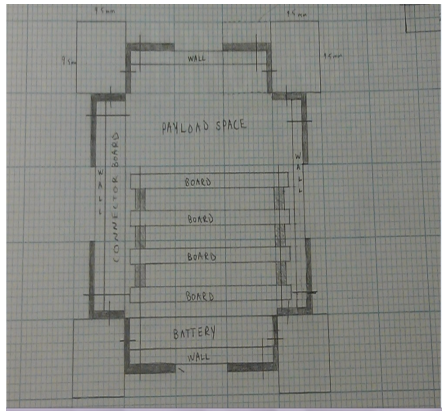

Figure 4.1: Layout Diagram

The dimensions of the CubeSat were originally 10 by 10 by 10 cm, however, the inside volume has been decreased in order to fit the structural rails, hinges, and solar panels on the side of the cube. The side frames have been brought in approximately for a width of 81 mm on 2 sides to account for the solar panel and hinge configuration. A visual of the current CubeSat layout can be seen in Figure 4.2

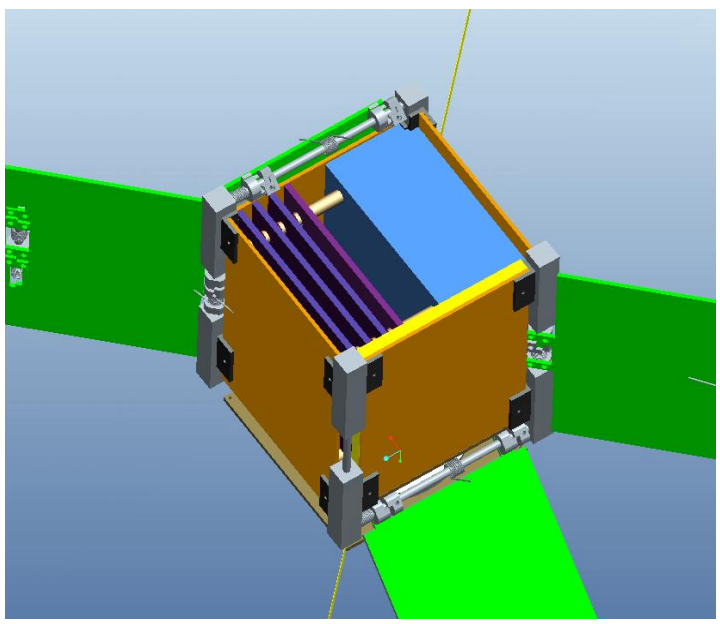

Figure 4.2: CubeSat Layout

Originally the four printed circuit boards were stacked in the y direction with a space of 3 mm between them. Each of the boards has a width of 85 mm. After choosing a different battery, the dimensions were found to be 49.95 mm x 45.50 mm x 5.70 mm.

The board and battery sizes changed the original positioning; the only option was to position the boards parallel to the z-axis. Traditionally the boards in many CubeSat designs are stacked perpendicularly to the z-axis, however, due to the unique design of the rails and hinges, the CubeSat would not allow for this placement. Figure 4.3 shows the boards, payload, and battery within the CubeSat.

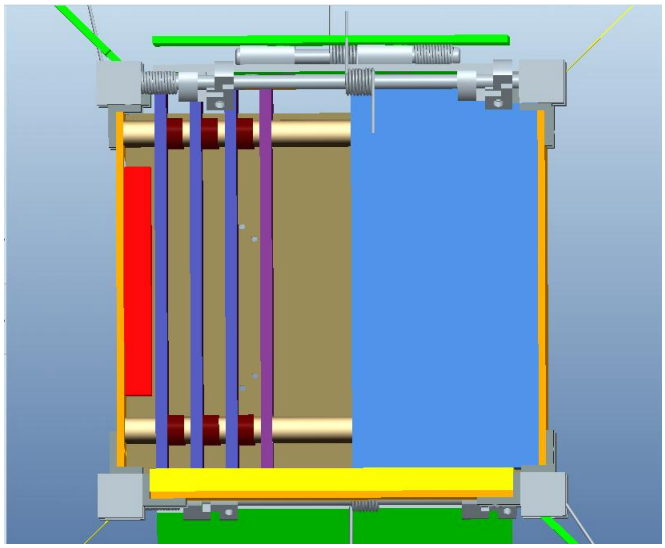

Figure 4.3: Layout of Boards, Payload, and Battery

From Left to Right:
Red = battery
Blue = PCB's (PGD, PGD, ADAC & CDH)
Purple = RF PCB
Light Blue = Payload
Yellow = Connector Board

The Power Generation and Distribution board is closest to the battery in order to decrease the amount of wire traveling from the battery to the board. The magnet will be place in the z axis direction on the ADAC board. It is necessary for the magnet to be located on the z axis in order to the satellite to properly spin about that axis.

The antenna system has been allotted 18 mm on top and bottom of the cube. The current antenna mechanism uses 7.95 mm on the top and the bottom for a total of 15.9 mm of space needed on the inside of the CubeSat in the z direction. Based on this design, 84.1 mm of space remains for the boards and other internal components on the z-axis. The board size was then decreased to 85 mm x 80 mm x 2.5 mm to fit within the CubeSat. The 80 mm size of the board will be in the z direction thus allowing space for the antenna. In order to decide the spacing between boards it was necessary to determine the tallest component mounted to each board. **Table 4.1:** shows the component height based on the board.

Board Owner	Component Height
ADAC	6 mm
CDH	2 mm
PGD	5 mm on both sides
RF	unknown

Table 4.1: Component Height

The RF component height is unknown because this is provided by AMSAT. Based on numerous components on the PGD it was decided that the components would be broken up into 2 boards with 1 board having components on both sides. Due to spacing, ADAC and CDH would be placed on 1 board together with components on both sides. Currently 2 mm of spacing from the highest component to the next board is between each board. This is an arbitrary amount that will need to be specified once a thermal model has been completed.

The four boards (2 PGD, CDH & ADAC, RF) are to be connected using a connector board. The dimensions of the connector board allow it to be placed flush up against one side of the CubeSat which efficiently using the spacing within the CubeSat. The dimensions of the board are 77.8 x 77.8 x 6.5 cm. The order of the boards sliding into the connector board was chosen due to power and heat dissipation reason. The PGD board is closest to the battery for connection and furthest away from the RF board to decrease interference. The boards are currently parallel to the battery. The order of the boards starting with the closest to the battery is PGD 1, PGD 2, CDH & ADAC, and RF. The arrangement of all components was finished by adding the PCB's to the battery and payload.

4.1.2. Physical Structure

The physical structure is one of the most important aspects of the CubeSat; it provides the structural integrity for the entire CubeSat and the housing for all of the electrical components including the PCB's, battery, solar panels, and payload. The structure must be stable and durable in order to survive the launch from the PPOD as well as the duration of the orbit.

The corner rails on most 1U CubeSats are solid rectangular bars with a uniform cross section throughout. There are often slight alterations to the inside faces of the rails in order to accommodate for internal components and boards. Due to the added deployable solar panels and hinges, it was necessary to redesign the rails of AMSAT Fox. This was done in order to provide room for the hinges. The middle section of the rails is now a third of the size of the ends with a circular cross section which acts as the pin of the hinge. The ends of the rails are 3/8" square aluminum. The middle is 1/8" round aluminum. Per CubeSat standards all aluminum used for the rails is T6 6061. Due to machinability constraints, the rails were constructed as 3 separate pieces: 2 square ends and the rod middle section. The pieces are connected by screwing the middle section into the ends which are threaded. The finished rails can be seen in Figure 4.4.

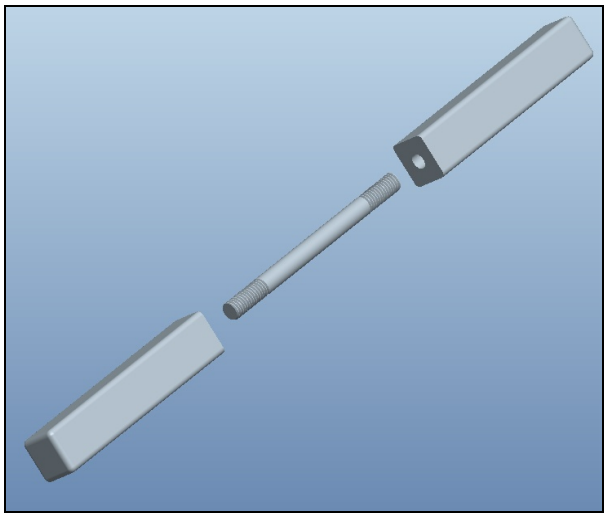

Figure 4.4: Rails of CubeSat Fox

The corner rails of the CubeSat provide the primary structural element of the entire body. The rails are attached through angled brackets which are attached directly to the outer faces of the cube. The brackets are made from 1/16" thick angled aluminum. The brackets can be seen in Figure 4.5.

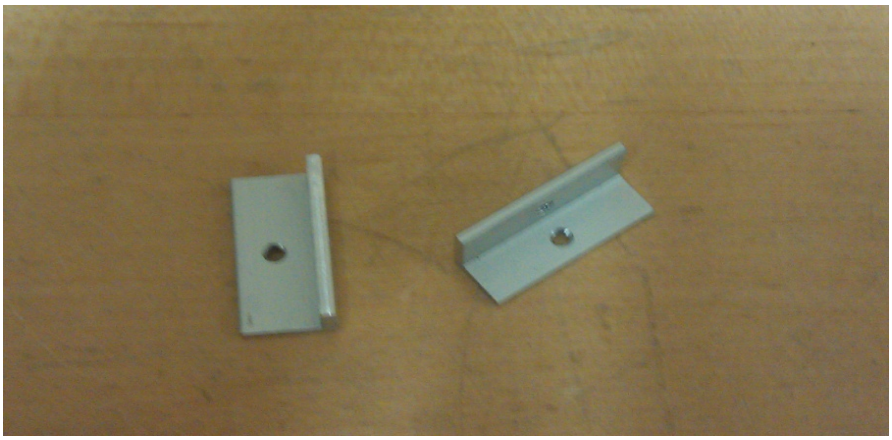

Figure 4.5: Brackets of CubeSat Fox

This bracket design allows the outer faces of the cube to be recessed providing the deployable solar panels enough space to lie flat when in a stowed position thus allowing no interference with the inside walls of the P-POD. A screw will attach the bracket to the rail. Another screw will be used to hold the PCB on the outer face of the CubeSat in place. Four brackets are attached to each rail with two being on the top end and two being on the bottom end. All holes for screws are offset slightly in order to ensure no interference between the screws within the rails. The structure including the rails and brackets can be seen in Figure 4.6.

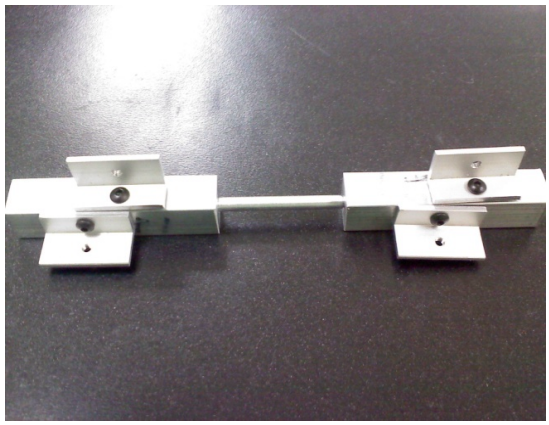

Figure 4.6: Structure Diagram with Brackets

For all screws on the structure, Loctite 3565 epoxy was used to prevent the backing out of screws. Loctite was chosen due to the similar thermal coefficient of expansion as aluminum T6 6061. Loctite has also been proven to be space ready as seen by many previous CubeSat models. The final structure can be seen in Figure 4.7.

Figure 4.7: Final Physical Structure

4.1.3. Mounting

With many components existing within CubeSat Fox in a limited amount of space, it is important to ensure the components do not shift or move in any way. Any movement could cause a change in the center of mass, loss of connection, or damage to PCBs. The mounting design chosen for the CubeSat is one with the use of screws set as placeholders. The battery, payload, and each PCB are securely held in place using screws as well as the connector board for the PCBs. A detailed image for the mounting design implementation can be seen in Figure 4.8.

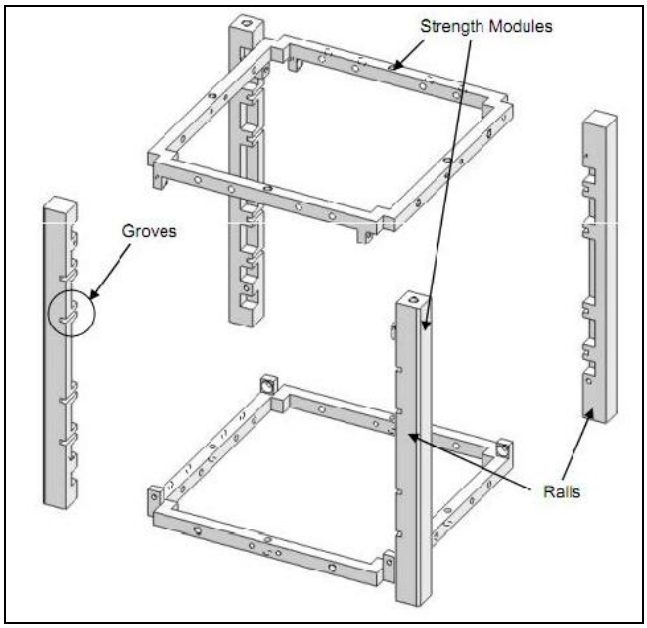

Figure 4.8: Mounting Diagram for Battery and Boards

4.2. Antenna Mechanism

4.2.1. Antenna Design Implementation

The finalized antenna mechanism design can be seen in Figure 4.9.

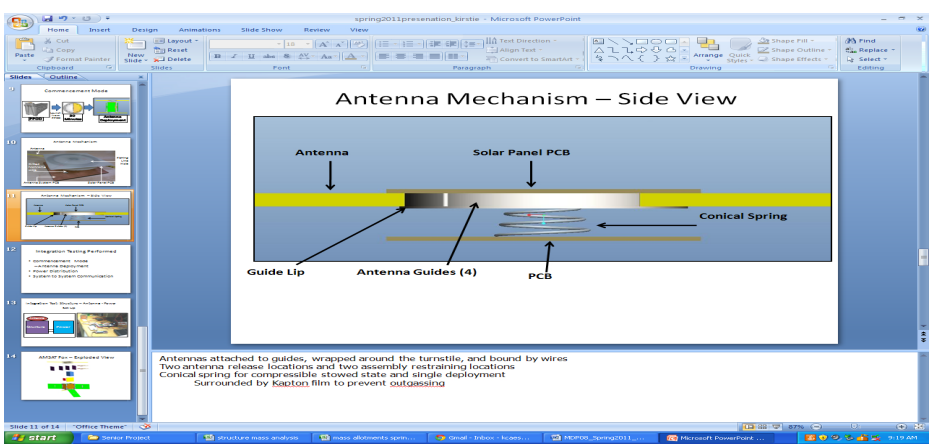

Figure 4.9: Antenna Design

The conical spring was added to design in order for the antennas to avoid collision with the structure rails. This spring pushes the antennas above the rails allowing the final resting point to be approximately 4 cm above the rails. This will ensure communication will not be jeopardized from the antennas.

In order for the antennas to release reliably the design chosen was the use of redundant melting wire. Fishing line is used the wrap the antennas around the device as well as hold the spring down. Nichrome wire is then wrapped around the fishing line. Once power is applied, the nichrome wire will heat up and, in turn, melt the fishing line. Once the fishing line is completely melted the antennas and spring will release. A top view of the redundant melting wire mechanism can be seen in Figure 4.10.

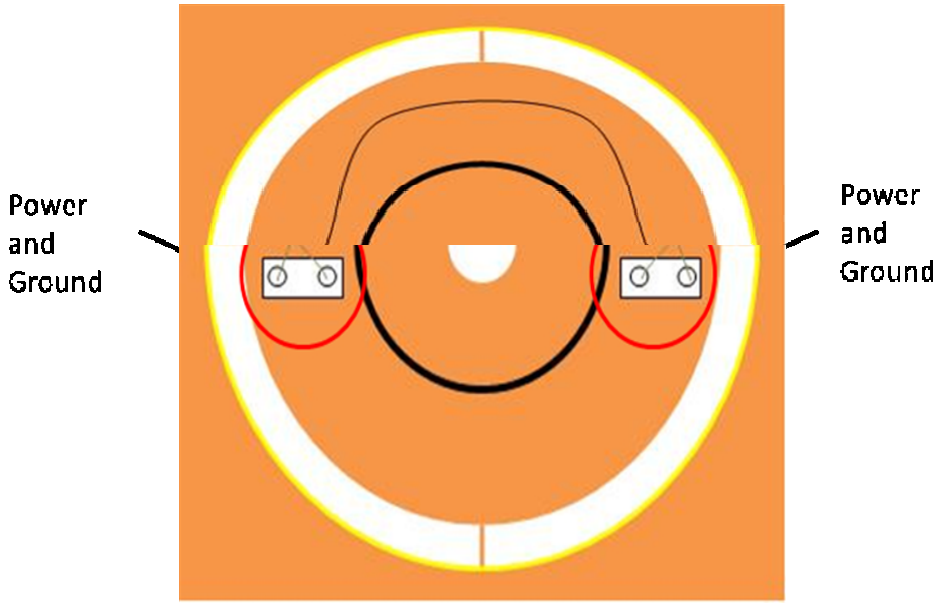

Figure 4.10: Top View of the Redundant Melting Wire Mechanism

4.2.2. Integration to Power

In order for AMSAT Fox to have full, reliable communication with the ground station it is necessary to have a reliable release mechanism of the antennas. Once the CubeSat has been launched from the PPOD, the internal clock will begin starting at 30 minutes. When the internal clock hits 0 seconds this will signal the power system to deploy the antenna mechanism. The antenna mechanism will be connected to the power generation and distribution team through the redundant melting wire mechanism. In order for the fishing line to melt the power team will pass a voltage differential across the nichrome wire. This will heat up the nichrome wire and, in turn, melt the fishing line. Once the fishing line has been melted, the spring and antennas will be released and deployed. Integration to Physical Structure

4.2.1. Integration to Physical Structure

A major challenge in integration was connecting the antenna mechanism to the physical CubeSat structure. Initially the design created entailed gluing the spring to the PCB and then securing the PCB to the structure using screws. This design would have added weight due to the screws and created an unnecessarily complex system. The final design and implementation was to glue the spring to the PCB and then secure the PCB using mounts already located on the structure.

It was important to ensure that the antennas did not conflict with the structural rails. This collision could potential impede on communication to the ground station and create an unsuccessfully antenna deployment. Careful calculations were done to ensure the spring would be able to lift the antenna mechanism above the rails after deployment. Testing has verified that this design is effective.

4.3. Deployable Solar Panels

The major advantage of using deployable solar panels is the added power that comes from the increased surface area. A modified design of the previous year's solar panel deployment allows the solar cells to be on the front and back of each deployed panel, as well as on the four side faces of the cube. The antenna mechanism was specifically designed to accommodate a solar panel on top of the component so that all 6 sides of the CubeSat possess solar cells. The material for the structure and solar panel backings will be the same material used for printed circuit boards in order to create an effective interface between solar panels and to decrease mass. A computer generated model of the deployed solar panels on the CubeSat can be seen in Figure 4.11.

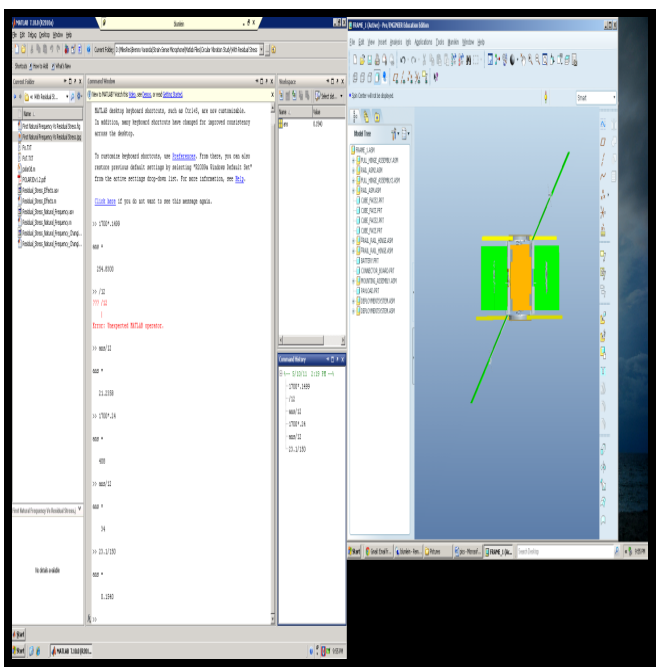

Figure 4.11: Deployed Solar Panel Configuration

Because there are two panels of solar panels it was necessary to design a hinge that would connect the panels and lock the panels linearly once the solar panels are deployed.

4.3.1. Hinge Mechanism

4.3.1.3. Inter-Panel Hinge

The inter-panel hinge connects the two PCB panels with solar cells together. This hinge is made of four normal mount pieces, a compression spring, a 180˚ torsion spring, and a toothlock

washer. These components are then fitted onto a hinge pin. A visual of the inter-panel hinge can be seen in Figure 4.12.

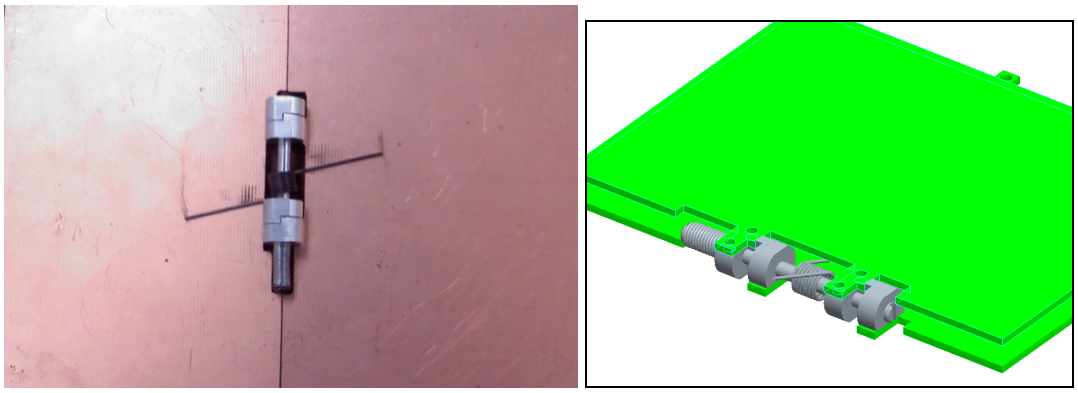

Figure 4.12: Inter-Panel Hinge

The panels will make a 180˚ angle between each other. In order for the panels to stop at the angle required, a stopping mechanism was design for the inter-panel hinge. The mounts in the hinge have been design such that they are similar to puzzle pieces. When the panel is released, the compression spring presses one mount into another. Once the torsion spring turns the panel enough one mount will slide and lock into the other mount creating a complete locking mechanism that cannot be moved in any way. This is a permanent locking mechanism. The locking mechanism can be seen in Figure 4.13.

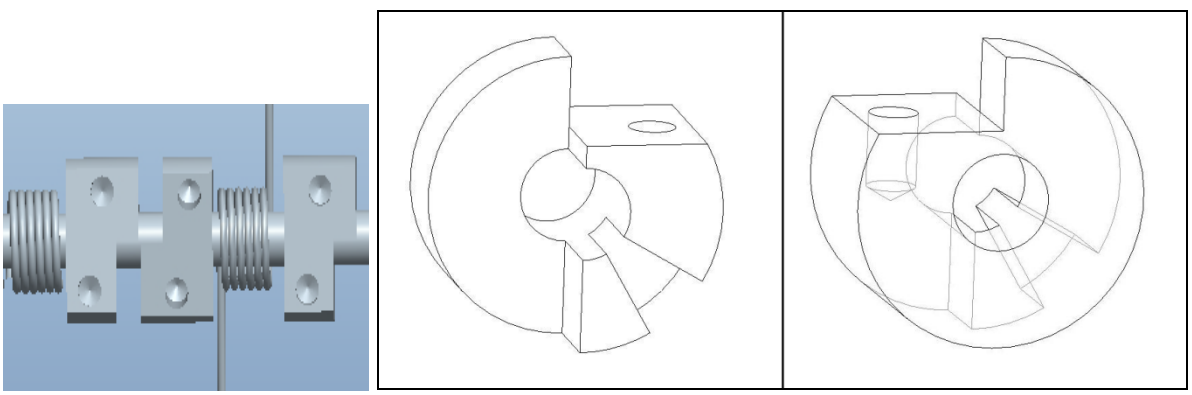

Figure 4.13: Locking Mechanism in Inter-Panel Hinge

4.3.1.4. Inter-Rail Hinge

The second piece of the solar panel design is the hinge going from the CubeSat rail structure to the first panel with solar cells. The inter-rail hinge is composed of a normal mount, rail mount, small mount, torsion spring, and compression spring. These are all place on to the inter-rail pins or on the bars perpendicular to the rail. The torsion spring is located between the mount set and the small mount. The compression spring is in between the mount set and the rail. A Pro/E visual of the inter-rail hinge can be seen in Figure 4.14.

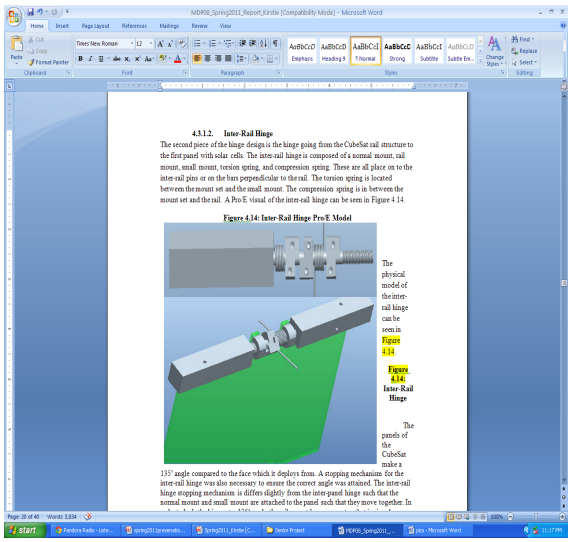

4.3.1.2. Inter-Rail Hinge

The second piece of the hinge design is the hinge going from the CubeSat rail structure to the first panel with solar cells. The inter-rail hinge is composed of a normal mount, rail mount, small mount, torsion spring, and compression spring. These are all place on to the inter-rail pins or on the bars perpendicular to the rail. The torsion spring is located between the mount set and the small mount. The compression spring is in between the mount set and the rail. A Pro/E visual of the inter-rail hinge can be seen in Figure 4.14.

Figure 4.14: Inter-Rail Hinge Pro/E Model

The physical model of the inter-rail hinge can be seen in Figure 4.14.

Figure 4.14: Inter-Rail Hinge

The panels of the CubeSat make a 135˚ angle compared to the face which it deploys from. A stopping mechanism for the inter-rail hinge was also necessary to ensure the correct angle was attained. The inter-rail hinge stopping mechanism is differs slightly from the inter-panel hinge such that the normal mount and small mount are attached to the panel such that they move together. In

Figure 4.14: Inter-Rail Hinge Pro/E Model

The panels of the CubeSat make a 135˚ angle compared to the face which it deploys from. A stopping mechanism for the inter-rail hinge was also necessary to ensure the correct angle was attained. The inter-rail hinge stopping mechanism is differs slightly from the inter-panel hinge such that the normal mount and small mount are attached to the panel such that they move together. In order to lock the hinge at a 135˚ angle the rail mount has a screw tap that is aimed towards the center of the mount. This allows the screw to stop the mount from moving.

4.3.2. Solar Panel Deployment- Integration between PGD, and PSTM

The deployment of the solar panels is completed in one step using use a redundant melting wire mechanism with Nichrome wire and fishing line. This deployment method is very similar to that used in the antenna deployment. The deployment will allow the panel-to-structure hinge to release and then allow the panel-to-panel hinge to release. Both hinges will lock once fully extended in the proper configuration. The single deployment method will decrease opportunity for failure of nichrome wire and use less power. In order for the nichrome wire to become hot enough to melt through the fishing line a voltage differential will be applied that is provided from PGD. Once power is distributed the fishing line will melt thus deploying the solar panels and allowing for increased power absorption.

4.4. Mass

The mass requirement for the 1U CubeSat is 1 kilogram including a payload for 250 grams. The largest mass components within the CubeSat are the structure, payload, and antenna mechanism. As you can see from Figure 4.15, all of the necessary items will be a mass of 1,287.07 grams with 289.07 grams of added mass. Currently this does not meet the AMSAT CubeSat mass requirement of 1,000 grams.

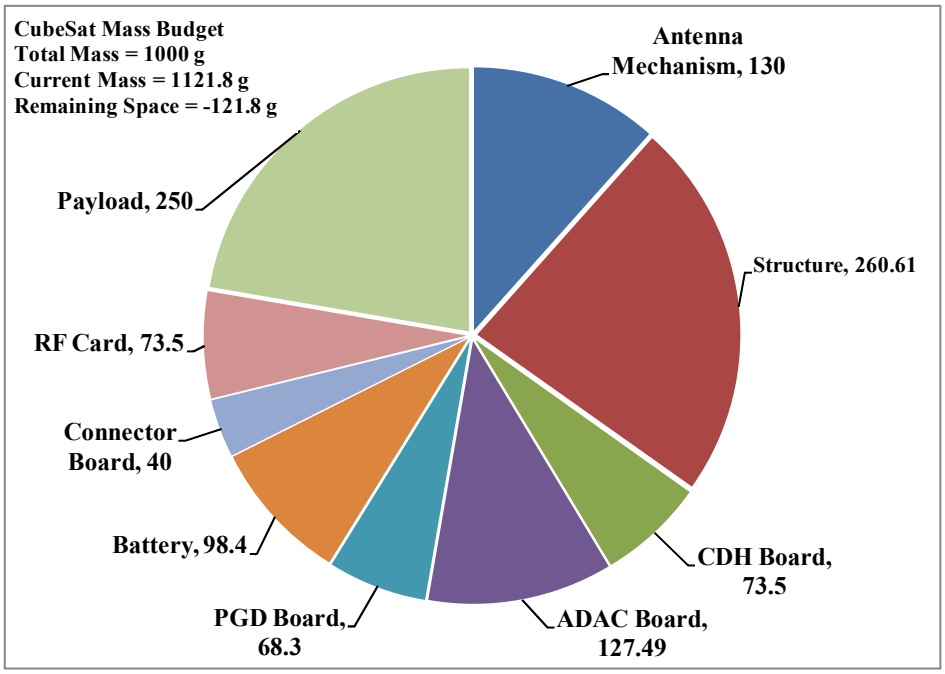

Figure 4.15: Pie Chart showing Mass Usage by System

A more detailed table of the mass allotment to each item is shown in Table 4-2:

Item	Mass (grams)
Antenna Mechanism	130
Structure	260.61
CDH Board	73.5
ADAC Board	127.49
PGD Board	68.3
Battery	98.4
Connector Board	40
RF Card	73.5
Payload	250
Total Mass (grams)	**1121.8**
Remaining Space (grams)	**-121.8**

Table 4-2: Mass Allotment by Item in CubeSat

Due to numerous design change and previous underestimation of mass, the CubeSat Fox is currently over the mass limit by 121.8 grams. Certain design modifications can be made to alter the CubeSat and decrease mass for the space ready model. One of the modifications that can be made is changing the outside structure material to FR-4. This would decrease the side structure by approximately half. Another modification that could be made is decreasing the mounting device on the hinge components. Currently the hinges are the leading component in terms of mass. There are a total of 8 hinges therefore decrease the mass of this component would significantly decrease the mass of the entire systems. Glue could be used to decrease mass due to screws. The L-brackets used to hold the structure together currently have a safety factor of 10.

This safety factor could be decreased in order to cut the size of the brackets in thirds and still have a secure structure. The mass decrease due to each modification can be seen in Table 4-3.

Modification	Original Mass (grams)	Modified Mass (grams)
PCB Walls Replaced with FR4	270	135
Mounting	14.096	7.048
Screws replaced with Glue	10.4	0.05
L-Brackets	18.88	6.29
Total Mass Decrease		**148.39**

Table 4-3: Decreased Mass Allotment by Item in CubeSat

Based on the mass of each subsystem, the current mass budget is more than 1 kg which does not meet the requirements for AMSAT. This current mass is subject to change with the design modifications discussed. Once the design modifications have been made the mass of the CubeSat Fox would be 973.41 grams which meets the CubeSat specifications.

4.5. Volume

The volume inside the CubeSat is 1,000 centimeters based on the dimension of 10 cm by 10 cm by 10 cm.

Components in CubeSat
Payload
Battery
CDH & ADAC PCB
Power Generation PCB
RF PCB
GPS
Antenna Mechanism
Magnet
Solar Panels
Hinges for Solar Panels

Table 4.4: CubeSat Components

Due to the dimensions of the PCB's and battery, the x-direction has no complications. The y-direction is more complex due to the need to accommodate the payload, boards, battery, and spacing between each component. After careful consideration of each component, placement was found for each component that used the CubeSat spacing efficiently and allowed for maximum heat dissipation across components.

Based on the dimensions and physical model it can be seen that all components fit within the CubeSat volumetric limits. Figure 4.16 shows the current engineering model of the CubeSat with the internal components in the structure.

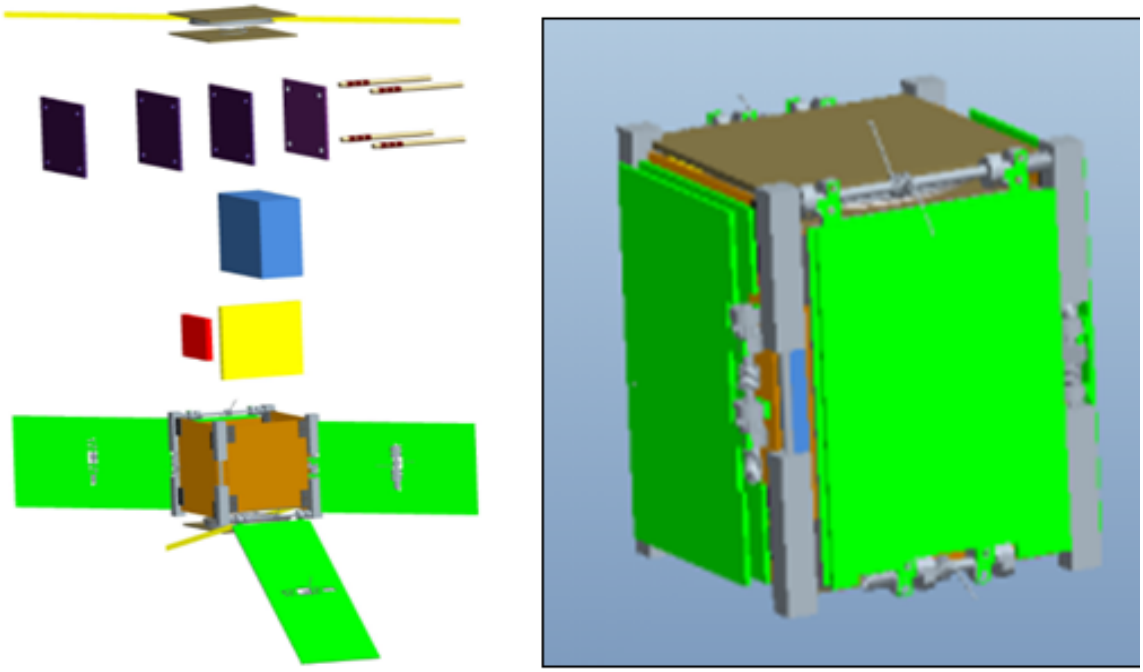

Figure 4.16: CubeSat Components – Exploded and Compact Views

5.0 System Integration Testing and Verification

Following the preliminary design review completed in December of 2010, the project focus changed from design and analysis to final implementation and testing.

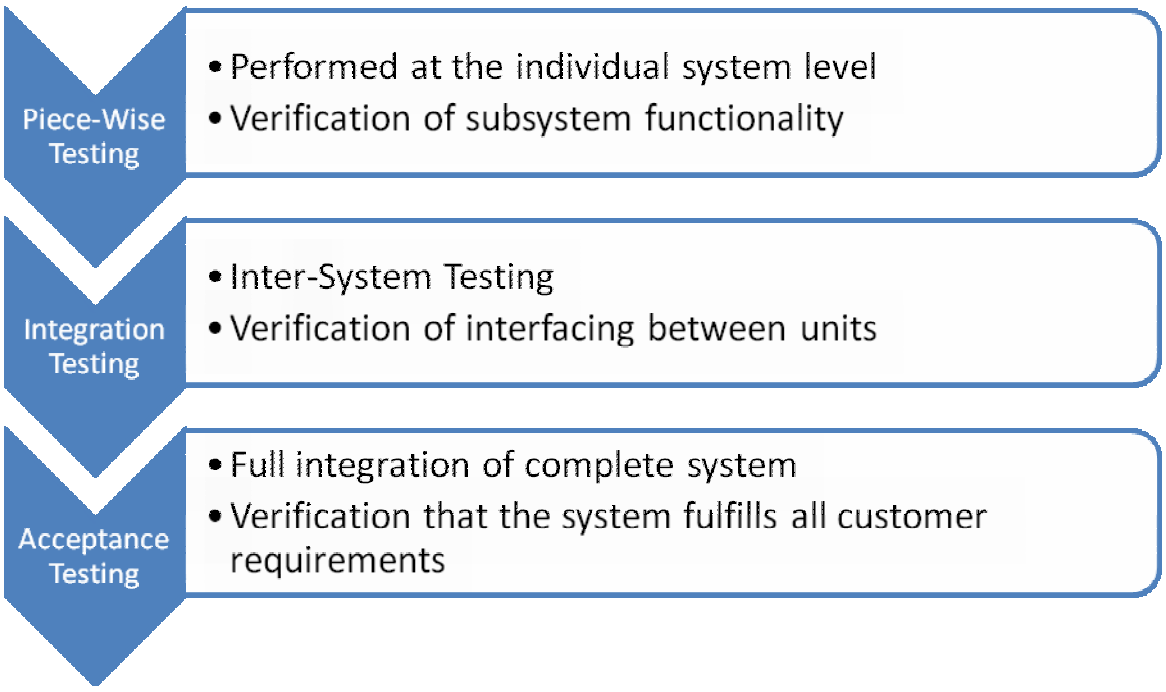

Figure 5.1: System Level Testing Classifications

Figure 5.1 outlines the three different testing classifications tailored to the system level.

For the system level, piece-wise testing consisted of the various tests performed by the individual subsystem teams to verify proper functionality and adherence to the specific customer requirements. The actual tests and the corresponding results can be found in the reports for the individual subsystems.

Upon completion of the subsystem piece-wise testing, integration testing was conducted. The integration testing focused upon connecting two or more of the related subsystems together in order to verify proper interfacing. The testing was a multi-group collaboration headed by the Spacecraft Systems Integration Team. The test procedures can be found in the Spacecraft Systems Integration Team Procedure document included on the project CD.

The final stage of testing, the acceptance level, consists of a large scale integration test in which all subsystems are incorporated together for a complete system test. This level of testing was not accomplished due to the time constraints of the project resulting in unfinished development.

This section of the report will detail the various integration tests that were conducted by the Spacecraft Systems Integration Team, the test results, and the impact on the overall project status.

5.1. PGD, ADAC, and CDH

5.1.1. Description

Integration testing was performed among the PGD, ADAC, and CDH applications and application hardware. Specifically, CodeWrapper onboard CDH hardware was used to call

AMSAT API functions to communicate with the RFM onboard the PGD and ADAC application hardware. Successful communication was established and verified based on viewing the data in designated register addresses via exposed signals to numerical displays. The results conclusively verify successful operation of each phase of the communication structures layers: Application/Software, Driver, and Hardware.

5.1.2. Test Equipment

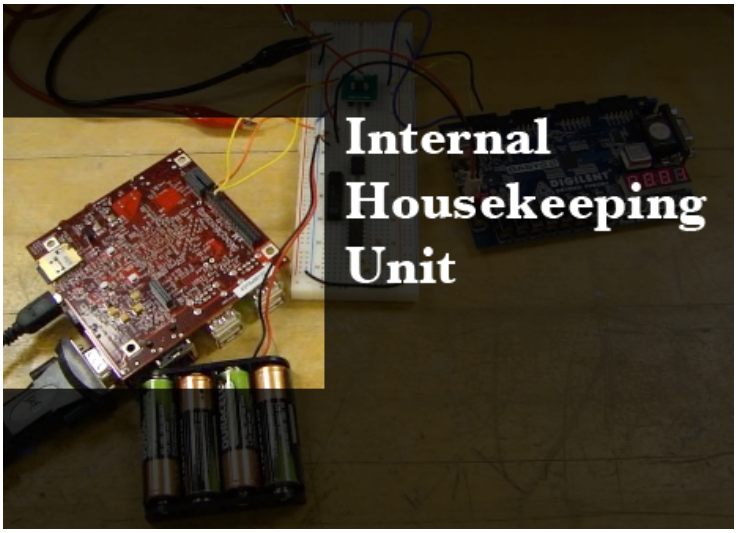

Figure 5.2 - Internal Housing Unit in System Test

In place of the IHU that will be onboard the CubeSAT a BeagleBoard with an ARM processor was used. This development board uses the same family of processors that will be chosen for the final design, as well as a similar form factor, the appropriate expansion headers for expedited development, and the correct storage expansion for non-volatile long term memory.

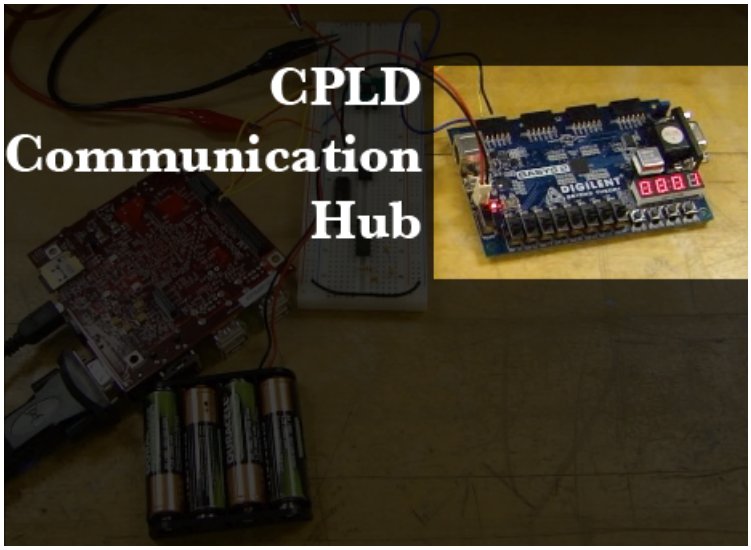

Figure 5.3 - Communication Hub in System Test

Replacing the CPLD communication hub onboard application hardware is a Basys 2 FPGA development board. This board was available to all Computer Engineers due to prior usage, therefore mitigating development costs. Also, FPGAs are remarkably similar to CPLDs, assuming the code developed for the FPGA is also targeted for the CPLD during synthesis. This was a top priority during development to ensure all developed code can be pushed forward onto CPLD during implementation.

5.1.3. Test Setup

In order to perform this test it is necessary to connect the I^2C headers SDA and SDC to the Basys 2's SDA and SDC port as specified by CDH's documentation. A test suite of software was created in order simulate the operation of application code. Specifically this code selects two distinct registers and writes different values. Another function then reads the two registers address's values to verify the correct values. All functionality is documented in the code.

5.1.4. Test Results

The test was ultimately successful, proving that the code called by the CodeWrapper application read the dynamic library from the Application Directory loaded the executable into memory, executed the specified function, wrote the values, returned to the CodeWrapper, at which point the next specified dynamic library in the Application Directory was executed to return the written values. The one can confirm the values by comparing the data returned to the command line with the value displayed on the seven-segment display on the Basys 2 board. The seven-segment display represents the value of a register address specified by the switches.

5.2. PGD and ASD Deployment Test

5.2.1. Description

This test was conducted using the Power Generation and Distribution System and the Antenna Deployment System. The objective of the test was to verify that, upon command, the power system can distribute power to the antenna system causing the antennas to deploy to the desired position. The test was performed twice. During the first test, only the deployment mechanism of the Antenna System was tested. During the second test, an assembled version of the Antenna System was used. The first test was performed on April 26, 2011. The second test was performed on April 28, 2011.

5.2.2. Test Equipment

Along with the Power Generation and Distribution System circuitry and the Antenna System (only deployment mechanism for the first test), the test also required an external switch circuit as an input, a solar cell simulator created by the Power Generation and Distribution team, and an external power supply. The external power supply was provided by Binghamton University for use in the project lab. The power supply part number was GW instek GPS-3303. A stopwatch and lab oscilloscope was also used to measure specific values during the test.

5.2.3. Test Setup

Figure 5.4 shows a representation of the deployment test setup from the system level. As can be seen, the external power supply outputs 8 VDC to the Power Generation and Distribution System circuitry. The power supply is used to mock the solar power input to the solar cells in the actual system. The solar cell simulator was built to mock the characteristics of the solar cells used in the actual design. The output of the solar cell simulator is then sent to the SEPIC converter, which regulates the voltage to a relatively constant 11 V. The output of the SEPIC converter then goes to the Lithium Ion batteries used to mock the actual battery chosen for the design. The 8 V battery output is then sent to the two buck converters where it is regulated to 5 V and 3.3 V. The 5 V line is then sent to the distribution circuitry from which it is output to the Antenna System upon command. This command comes from the BASYS2 Board of the Power Generation and Distribution System and the external switch circuitry built by the Integration Team. The BASYS2 Board mocks the CPLD used in the actual design and the external switch mocks the PPOD switches.

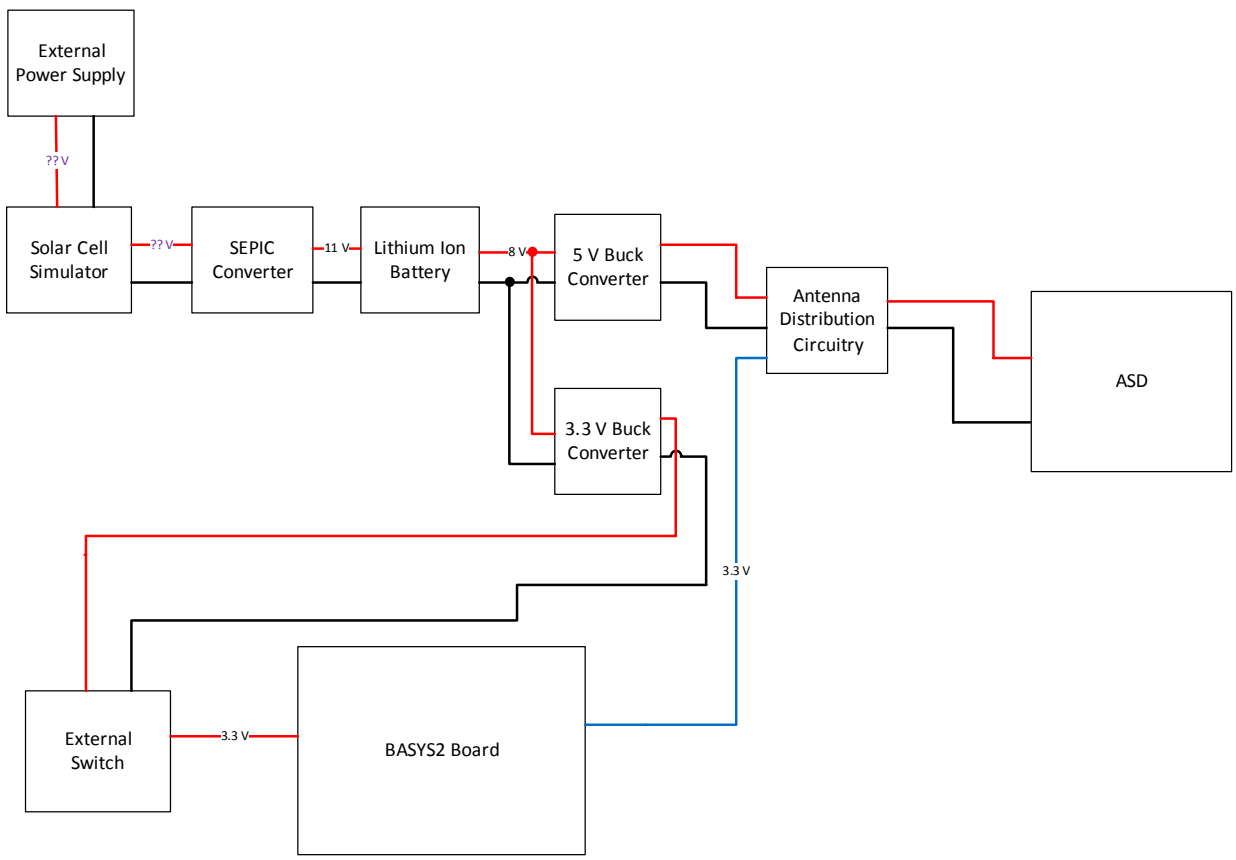

Figure 5.4: PGD and ASD Integration Test Setup

Schematics for the Power Generation and Distribution circuitry can be found in the report created by MDP 05.

Figure 5.5 shows a PSPICE model of the Antenna System deployment mechanism. The mechanism utilizes nichrome wire and fishing line to cause deployment. The specific details of the materials used and the creation of the system can be found in the report created by MDP 06. The length and type of nichrome wire used for the design resulted in a resistance of 4.5 Ω per piece. The circuit has an equivalent resistance of 4.5 Ω which results in a total current draw of 1.11 A. The figure shows the electrical schematic for the full Antenna System.

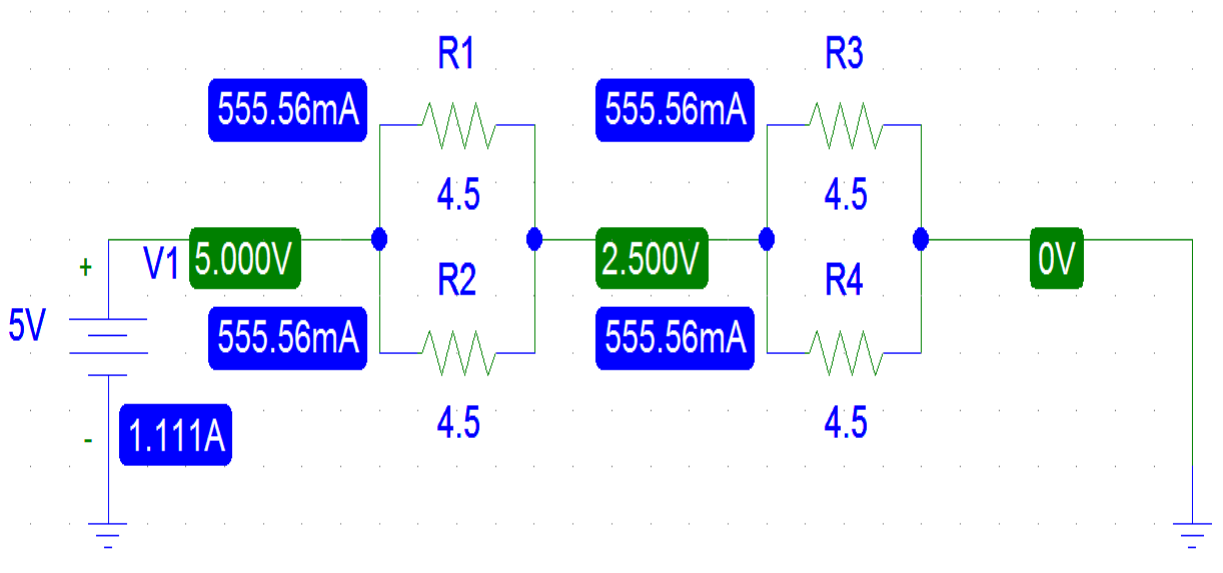

Figure 5.5: Antenna Deployment Schematic

In the actual design, antennas will deploy from both the top and bottom of the CubeSat. The first two resistors in the diagram represent one of the antenna systems while the last two resistors represent the other antenna system.

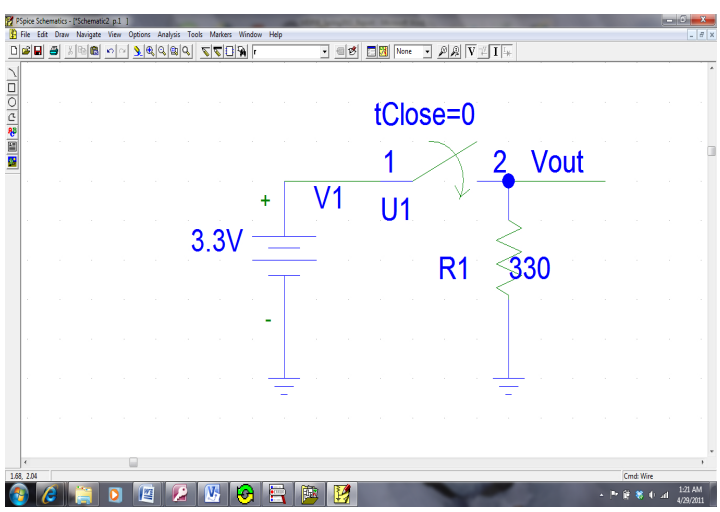

Figure 5.6: External Switch Schematic

The external switch circuitry was developed in order to mimic the system input provided by the PPOD switches. These two switches are located on diagonally opposite ends of the CubeSat structure, one on the bottom and one on the top. In the actual system, these prevent the initiation of the Commencement Operating Mode, in which the antennas are deployed, until the CubeSat is launched. The launch will cause these switches to depress. There are two switches solely for redundancy purposes required by the CubeSat Standard. Since they control the same functionality, only one switch was needed for the deployment demonstration.

As seen in **Figure 5.6**, "Vout" is pulled down to 0 V by the 330 Ω resistor. When the switch is closed, "Vout" is connected to 3.3 V. This signal is sent to the BASYS2 Board to initiate the deployment timer.

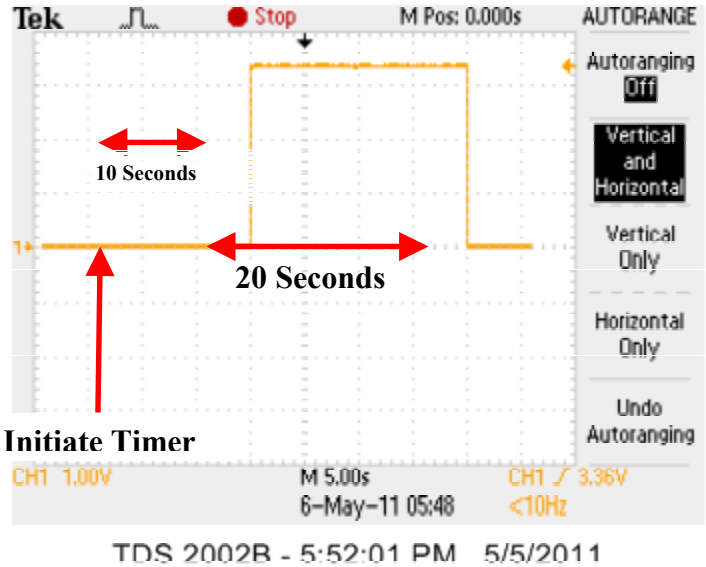

Figure 5.7: Power Distribution Control Signal

The deployment timer runs on the FPGA. The timer starts at an initialized value (10 seconds for the demonstration). The current value of the timer is displayed on the seven segment displays on the BASYS2 Board. Once the timer expires, an output pin goes high for a configurable amount of time (20 seconds for the demonstration) and then goes low. This control signal allows power to be distributed to the Antenna System for the allotted time. An oscilloscope screen capture of the control signal is shown above in **Figure 5.7**.

For the demo, the timer start value was initialized to 10 seconds. In the actual design, the timer will be set to a value greater than or equal to 30 minutes per FCC regulations. The output was configured to go high for 20 seconds. The actual value will be determined by the customer. The time must be chosen so that it is long enough for deployment, but does not waste power by staying on too long after deployment has occurred.

The VHDL code for the Commencement Operating Mode written by the Integration Team can be found on the project CD.

5.2.4. Results and Summary

The first deployment test conducted on April 26, 2011 successfully melted the fishing placed over the nichrome wire of the Antenna System deployment mechanism. When the external switch was closed, the timer initiated properly. After the 10 second count down, the BASYS2 Board output a logic high for the specified 20 seconds. Melting occurred within 3 seconds.

On April 28, 2011, the second test was performed. The test was witnessed by the customer. The external switch and timer functioned properly. The Antenna System only partially deployed following the timer expiration. The spring mechanism necessary to raise the antennas released as designed. The antennas however did not deploy. Following analysis of the antenna failure, it was concluded that the system design contained a minor flaw. The fishing line became caught on the antenna structure, which prevented the antennas from releasing. The design was set to be modified by altering how the fishing line would be used to hold the structure in place. Full details addressing the modifications can be found in the report created by MDP 06. A video of the demonstration is provided on the project CD.

The PGD and ASD Deployment test verified partial fulfillment of the antenna deployment requirement. The test confirmed the design of the power distribution circuitry along with the deployment mechanism. The test also showed the ability to interface with a programmable device and use digital outputs as control signals. Finally, the test served as a successful simulation of the Commencement Operating Mode in which deployment was delayed for the specified amount of time. Future testing will be necessary to verify the modifications to the Antenna System as well as to determine the optimal amount of time that power should be distributed to the system.

5.1. PGD ASD and PSTM Deployment Test

5.1.1. Description

The PGD ASD and PSTM Deployment Test is an integration test incorporating three of the CubeSat Systems (Power Generation and Distribution, Antenna System, and Physical Structure). The purpose of the test is to deploy the antennas following the expiration of a timer. The circuit is initiated by the closing of a mechanical switch. The main focus of the test is to verify that when the antennas deploy, there is no interference with the CubeSat structure. This test is a full simulation of the Commencement Operating Mode of the Fox CubeSat.

5.1.2. Test Equipment

The same components were used for the PGD ASD and PSTM Deployment Test as were used for the PGD and ASD Deployment Test with the exception for the addition of the manufactured CubeSat structure.

5.1.3. Test Setup

The setup for this integration test is the same as for the previous test except the Antenna System was placed on top of the designed CubeSat structure. Electrically, no changes were necessary. A photo of the test setup is shown below in **Figure 5.8**.

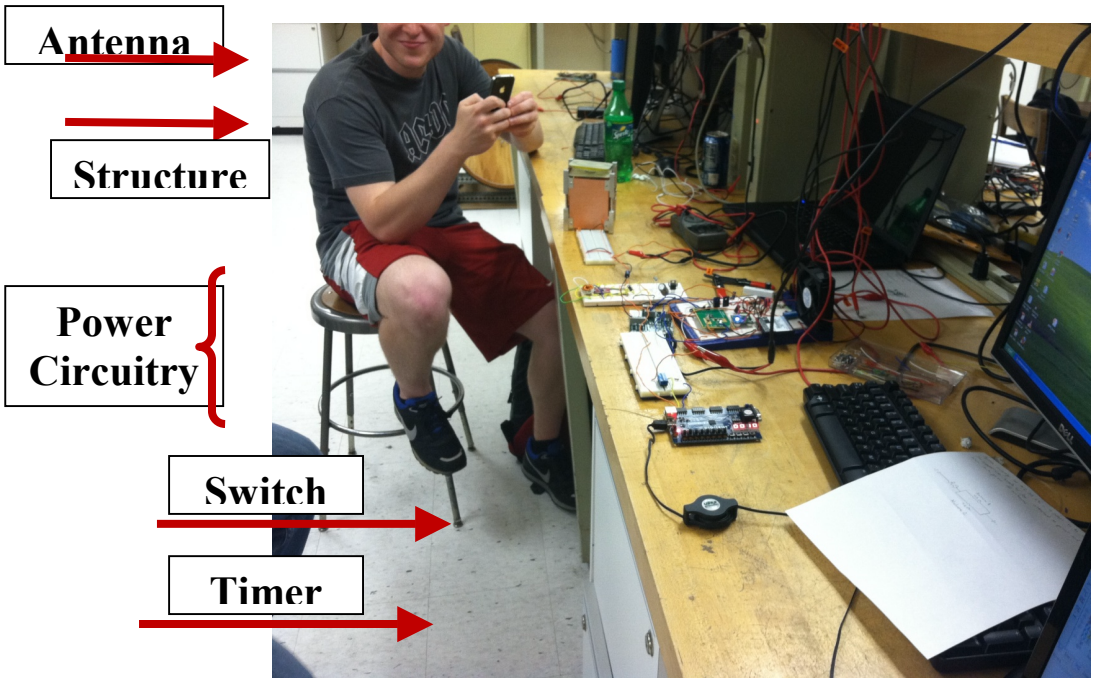

Figure 5.8: PGD ASD and PSTM Deployment Test Setup

5.1.4. Results and Summary

A single trial of the integration test was performed on May 9, 2011. The main objectives of the test were fulfilled. The modifications made to the Antenna System concerning the fishing line worked to properly restrain the antennas prior to deployment and fully release the antennas upon deployment. As a result, this test also satisfied the requirements for the previous integration test.

Upon issuing the deployment command by closing the external switch, the timer delay functioned properly. Once the timer expired, power was sent to the antenna deployment mechanism. The Nichrome wire heated up to the proper temperature to melt the fishing line. Once melted, the spring in the antenna design successfully lifted the antenna system above the CubeSat structure. The antennas then deployed without any interference from the rails or sides of the structure.

This demonstration fully simulated the Commencement Operating Mode requirement for the AMSAT Fox CubeSat. An external switch initiated the deployment timer. The timer delayed for the configured amount of time. Power was sent to the Antenna System for the specified time. The current caused the Nichrome wire to heat up and melt the fishing line. The melting released the antenna spring and antennas. The antennas ended in the desired position.

6.0 Summary of Budgets

6.1. Mass

Based on the original mass figures from each team this semester, the mass of the 1U CubeSat is approximately 1,122grams including the payload. This is currently over the 1,000 gram limit. Possible modifications have been detailed for future designs in order to decrease the mass of the structure thus decreasing the overall mass.

6.2. Volume

The layout of the current designs and components of the CubeSat comply with the volumetric constraints. The components have proven to fit within the CubeSat Fox, however, thermal analysis has not been completed on the layout. This will need to be completed in order to find the optimal configuration with respect to heat dissipation and to ensure that all components will be in their optimal operational temperatures.

6.3. Power

As discussed in the electrical system section, the overall power budget currently does not exceed the expected amount of available power. The various subsystems have been designed with the purpose of limiting power consumption. The overall power budget, however, is based upon the deployed solar panel configuration. Failure of this system would have detrimental ramifications. The input power from the stowed configuration would not be enough to provide all of the necessary functionality. As a result, this system will need to have 100% reliability in order for the CubeSat mission to be fully operational.

6.4. Cost

The total cost for the CubeSat has been approximated to $1,500. This includes report binding for each team, battery, printed circuit boards, structure, and other necessary components. The cost estimate broken down by subsystem can be seen in Table 6.1.

Subsystem	Cost
ADAC	$283.00
ASD	$296.14
CDH	$392.51
PDG	$207.07
PSTM	$128.85
SI	$50.00
Total Material Cost	**$1,478.93**

Table 6.1: Cost Breakdown by Subsystem

A detailed cost estimate can be seen in Appendix D.

7.0 Current Status and Future Developments

At the conclusion of the design project, all system level design has been completed. Implementation of the overall electrical and communication systems is well underway. Structurally, the full CubeSat housing has been designed and machined. An internal layout has been proposed along with mounting style.

Integrative testing has been started that aims to test the high level system as well as each of the individual components. Three integration tests were used to verify the completion of the high level requirements for the electrical, communication, and mechanical systems.

Although more testing was originally planned to be performed prior to the end of the term, time constraints prevented full completion. Figure 7.1 outlines the level of completeness for each of the planned integration tests.

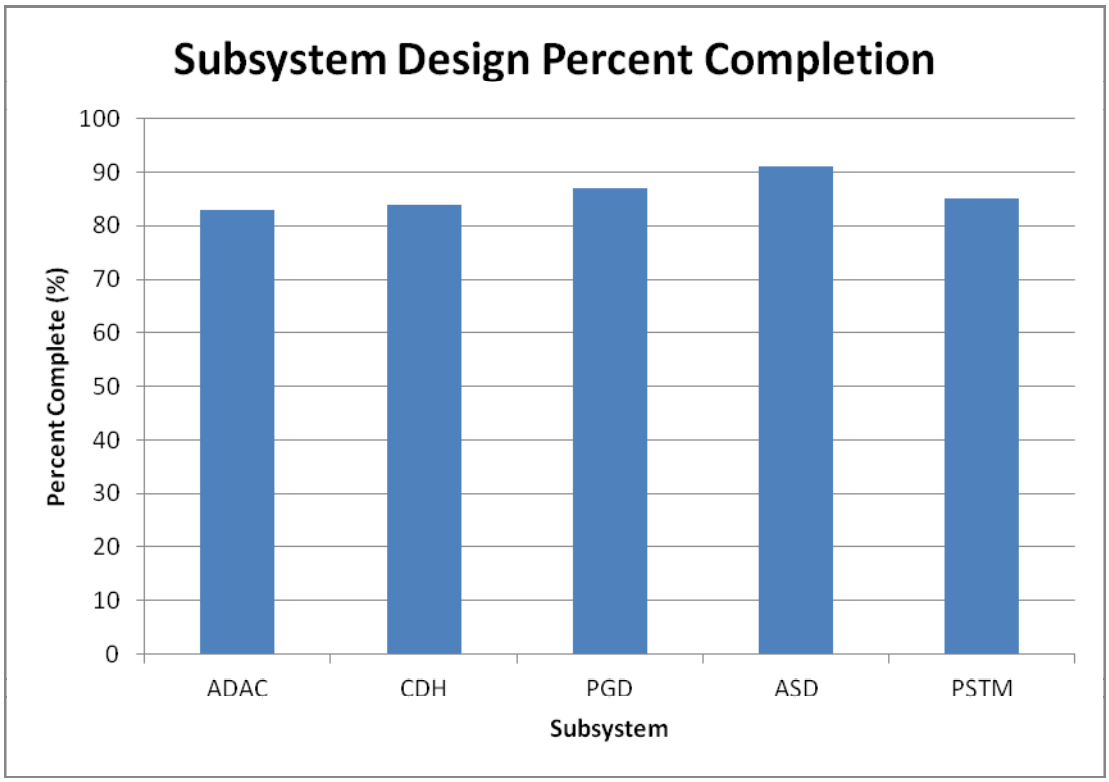

Figure 7.1: Approximate Percent Completion by Subsystem

As seen in the graph, the PGD-ASD testing has been fully completed. The PGD-ASD- PSTM testing has been conducted and is nearly complete. The final step in this test would involve fully mounting the antenna system to the structure. The final two tests are also progressing toward completeness. Additional work must be done to verify that subsystems respond to data written from Command and Data Handling to the register file modules.

Future work should focus on completing the remainder of the integration test outline in the test

procedure along with further development in each of the high level systems.

7.1. Electrical

The CubeSat electrical system has shown the ability to distribute power to a fellow system when commanded. Output based on automated command

As stated in section 2.4.1, the backplane board was the design solution for interfacing the various components of the satellite. The backplane board, however, was only designed from a system level. At present, it is a black box development. Future work should focus on implementing the actual design and repeating the integration tests using the board for all power and signal routing. The backplane board should only be created once all of the other systems are complete and the internal layout has been finalized following a thermal analysis. Otherwise, the addition of any signals would pose a problem and the connectors may not be in the proper positions.

7.2. Communication

Virtually all aspects of the communication structure can be expanded upon and improved. The current implementation is a base structure specifically designed to be developed further.

CodeWrapper has the most potential to be improved upon. Monitoring each application's run-time is crucial to the platform's stability. If any application's code gets caught in a loop, it is imperative to catch this and abort execution. Also, it can be modified to receive updates to current dynamic libraries from the ground station. In order for this to be successful, CodeWrapper must understand that an update will be applied to a specific library and must take precautions against corruption, such as CRC error detection or encoding for error correction after transmission. Additionally, if new code fails, it should maintain previous versions for back up.

Another area of development is sanity checks and decision-making. Should the processor fail, the CPLD on-board the IHU should take control of the I2C bus in order to maintain contact with each board's data.

7.3. Mechanical

Future mechanical developments should be focus on further designs that would decrease mass and volume. Focus should be on rail design as well as hinge design. The majority of mass problems originate from the structure. Another focus for future teams is to test the redundant nichrome wire on the solar panels. Calculations have been done for the fishing line gage size and the voltage differential necessary for the fishing line to melt, however, no testing has been done to confirm the calculations.

The internal layout will need to be analyzed in term of thermal properties and heat dissipation using a formal analysis program. The layout this semester was thermally analyzed on a basic level, however, more in depth analysis will need to be completed. In order to optimally position the components a detailed analysis must be completed with all heat and dissipation methods taken into account. Components can then be moved within the CubeSat based on the results.

8.0 Conclusion

The Systems Integration Team has been responsible for developing the major subsystems of the Fox CubeSat. Over the course of the two semesters, the team has made significant progress on creating the overall structure for each of these systems. The electrical system has been fully designed and provides the interface connections needed to integrate all CubeSat components. Building on this system, a communication system has been designed. The system controls all CubeSat functionality and the means for autonomous operation. A model of the CubeSat structure along with mounting and layout specifications have been developed as well. These three systems, once fully complete, will address all customer requirements and produce an operational Fox CubeSat.

Various integration tests have been performed to demonstrate the basic functionality of these systems. The tests show a proof of concept and should motivate continued development. The next stages of development have also been identified for easing the transition between design teams.

Overall, a strong foundation has been created for the CubeSat model. In addition, due to the modular design, these systems can be incorporated as a platform for all future CubeSat development by AMSAT. This will enable the customer to produce space ready designs quickly and efficiently. These building blocks can easily be manipulated to address new requirements imposed by the customer.

The Fox CubeSat has provided approximately 30 students with the opportunity to gain experience in a large industry-level design project. Although the resulting product following a year of development is not a space ready satellite, the overall engineering model is well on its way toward completion. The teams have worked to fulfill nearly all major components for their respective subsystems. In the process, the work has also accomplished AMSAT's mission of increasing student interest in space development. The design project highlights the importance of mechanical and electrical integration, along with the importance of the engineering design process.

9.0 Acknowledgements

The members of the Spacecraft Systems Integration Team would like to extend gratitude toward the corporate sponsor for this project, the Radio Amateur Satellite Corporation. AMSAT provided the team with an interesting, challenging, and exciting project. The members were able to gain experience in group leadership, project management, and systems engineering. The team is thankful for the opportunity to have worked closely with AMSAT on their first CubeSat venture.

The Spacecraft Systems Integration Team would like to also extend thanks to the Faculty and Industrial Advisors for the project, Professor Kurt Rogers and Alex Harvilchuck. The advisors' dedication, time commitment, enthusiasm, and technical support were critical factors for all of the accomplishments and developments made throughout the project.

10.0 REFERENCES

[1] Radio Amateur Satellite Corporation, NextGen CubeSat Proposal, 2010, PowerPoint Presentation.

[2] Radio Amateur Satellite Corporation, AMSAT Fox - System Requirements, 2010, Draft 1, November 29, 2010.

[3] MDP 05: Power Generation and Distribution Team, "Spacecraft Power Generation and Distribution," Binghamton University, Vestal, Final Report 2011.

[4] Radio Amateur Satellite Corporation, Fox Modes, 2010, Modes of Operation Document.

[5] MDP 03: Attitude Determination and Control Team, "Attitude Determination and Control," Binghamton University, Vestal, Final Report 2011.

Frequency Allocation for Government-funded CubeSats: NSF Paves the Way

Bryan Klofas (KF6ZEO)
SRI International
bryan.klofas@sri.com

October 2011

Abstract

In the beginning, the CubeSat project was a loose collaboration of universities proving that students could build and launch satellites. Building the entire spacecraft on a shoestring budget, these universities partnered with local radio amateurs and used amateur radio frequencies to downlink the small amount of housekeeping data generated.

As the CubeSat project enters its second decade, several large government agencies have started funding CubeSat projects for various missions, in such areas as space weather, imaging, defense, communications, and education. It violates the intent of the Amateur service, and may violate NTIA rules, for government-funded CubeSats to use amateur radio frequencies for communications.

The National Science Foundation (NSF) has been funding space weather CubeSat projects for several years, and is using its Electromagnetic Spectrum Management group to find short- and long-term solutions to these issues. This paper describes the current NSF CubeSats and efforts to transition away from amateur radio frequencies.

1 Introduction

The CubeSat Project was started in 2001 by Dr. Jordi Puig-Suari at California Polytechnic State University (Cal Poly) and Professor Robert Twiggs at Stanford University. The concept is very simple: if your CubeSat fits into this box, it will get launched at the next available opportunity. The launch vehicle and orbit may not be known when you start building your satellite, but as long as your payload can accept a wide range of orbits, it will get into space[1].

For several reasons, the CubeSat community has always embraced amateur radio. Amateurs have been building satellites for decades, and enjoy sharing their knowledge of the process. Amateur radio hardware is relatively inexpensive and easy to set up, perfect for universities with limited funds and no prior experience building satellites or ground stations. Amateur radio satellite builders volunteer their time to help universities select or build a radio for the spacecraft. Amateur satellite licenses are easy to get, just fill out a simple form and wait a few months. Hundreds of amateurs across the world can send you telemetry from your spacecraft, and uplink commands if necessary to revive a failing satellite[2].

Of the 47 CubeSats launched to date, only 13 have not used amateur radio frequencies: CSTB1, AeroCube-2, MAST, CanX-2, AeroCube-3, K-Sat, and seven CubeSats on the latest Falcon-9 flight[3]. The seven CubeSats on this latest Falcon-9 flight went through the National Telecommunications and Information Administration (NTIA) process with a military agency as the sponsor, and received a frequency allocation before launch.

However, there is a downside to using amateur radio frequencies. The amateur community is tiring of CubeSats using their spectrum. The allocations of 25 kHz or less do not support high-speed downlinks. All downlink telemetry data and formats must be unencrypted and published, so anybody with a receiver can find out detailed information about the spacecraft and payload.

2 Benefits of Federal Frequency Allocation

While an amateur frequency authorization is fairly easy to obtain, there are many advantages to receiving dedicated spectrum for a CubeSat project. Legally, federally funded projects must go through the NTIA for frequency authorization, and the federal government can't authorize amateur radio frequencies.

While amateur frequency authorizations are usually very narrow–25 kHz or less–NTIA and FCC satellite authorizations can be tens of megahertz wide for high-speed downlinks. See Appendix B for a table of available spectrums for satellite communications between 100 MHz and 6 GHz.

Encryption is also permitted for projects that require it, although NSF CubeSats do not (generally) encrypt their downlink.

3 Current NSF Allocations

The NSF CubeSat program is the first government program for space science missions on CubeSats. It was started in 2008 by Therese Jorgensen in the Division of Atmospheric and Geospace Sciences. As with all NSF programs, education is a large component, and continuing student involvement is required for all teams[4].

To date there have been three calls for proposals, with eight research projects selected. Table 1 shows a summary of the teams' current licensing approaches. Only three of the eight NSF CubeSat

projects are trying to go through the federal licensing process, with one team undecided about what to do.

Table 1: Summary of NSF CubeSat Licenses.

Award	Satellite	Downlink	License			
			Type	**Agency**	**Sponsor**	**Status**
1	RAX	437.505 MHz	Amateur	FCC	UMich	Granted
	Firefly	401 MHz	Space Research	NTIA	NASA Wallops	Submitted
ARRA[1]	FIREBIRD	145 MHz	Amateur	FCC	MSU	Not submitted
	DICE	460 MHz	Meteorological Satellite	NTIA	NSF	Certified
2	CINEMA	2.2 GHz	Space Research[2]	NTIA	NSF	Certified
	CSSWE	437.345 MHz	Experimental	FCC	UColorado	Coordinated
3	CADRE	437 MHz	Amateur	FCC	UMich	Not submitted
	ExoCube	UHF	?	?	?	Not submitted

[1] These two awards were paid for by The American Recovery and Reinvestment Act of 2009. NSF will not coordinate or fund a launch for these satellites, so the award was increased to compensate.

[2] Because larger satellite projects at UC Berkeley also use these frequencies, they have existing knowledge and hardware for these frequencies.

Table 2 summarizes the modulation schemes and radios involved with each satellites communication subsystem.

Table 2: Summary of spacecraft transmitters.

Satellite	Downlink	Modulation	Spacecraft TX	Groundstation RX	Launch
RAX	437.505 MHz	9600 baud FSK	AstroDev Helium	Icom 910	STP-S26[1]
Firefly	401 MHz	38.4 kbps FSK	AstroDev Colony-2	Microdyne 1200-MRC	ELaNa Approved
FIREBIRD	145 MHz	19200 baud FSK	AstroDev Helium	FUNcube Dongle	ELaNa Approved
DICE	460 MHz	1.5 Mbps BPSK	L3 Cadet	USRP	ELaNa3/NPP
CINEMA	2.2 GHz	1 Mbps	Emhiser	11m dish	ELaNa6/OUTSat
CSSWE	437.345 MHz	9600 baud FSK	AstroDev Lithium	TS-2000	ELaNa3/OUTSat
CADRE	437 MHz	9600 baud FSK	AstroDev Lithium	Icom 910	ELaNa[2]
ExoCube	UHF	9600 baud FSK	AX5042	Yaesu 847	ELaNa[2]

[1] As opposed to all the other NSF CubeSats discussed in this paper, RAX was actually launched on this rocket in November 2010.

[2] These teams will presumably apply for the ELaNa program in the November 2011 call, although they may not actually be launched through the ELaNa program.

3.1 RAX

The Radio Aurora eXplorer (RAX) 3U CubeSat from the University of Michigan and SRI International measured small-scale plasma density irregularities in the Earth's ionosphere. RAX contained an on-board radar receiver that listened for coherent radar echoes from magnetic field-aligned irregularities illuminated by megawatt-class ground-based radar systems[5, 6].

Because RAX was the first NSF-sponsored CubeSat, the infrastructure to apply for other radio services was not in place at the beginning of the project, so amateur frequencies were used. The primary downlink was at 437.505 MHz 9600 baud FSK. RAX also contained a secondary downlink using a Microhard MHX-2400 in the 2.4GHz ISM band, but this radio was never turned on.

RAX failed prematurely a few months after launch due to power generation problems[7]. While

this failure was unfortunate, all the satellite subsystems were tested and performed well during its short life. A second spacecraft, RAX-2, is scheduled to fly on 27 October 2011 on the ELaNa3/NPP mission from Vandenberg, California. It has improved attitude determination sensors and reengineered solar panels[8].

3.2 Firefly

The Firefly 3U CubeSat from Siena College and NASA Goddard Space Flight Center is exploring the causal links between ground lightning and terrestrial gamma ray flashes, with associated energetic electrons ejected from the atmosphere. These electrons are thought to become trapped in the inner radiation belts and impact the energy balance of the near-Earth magnetosphere.

Firefly is pursuing a frequency allocation in the 401 MHz Space Research band. Firefly elected to use NASA Goddard as the sponsoring agency, as the PI works there. It uses an AstroDev Colony-2 UHF radio at 38.4 kbaud on the spacecraft, and a commercial Microdyne receiver at Goddard's large 18m dish[9].

3.3 FIREBIRD

The Focused Investigations of Relativistic Electron Burst Intensity, Range, and Dynamics (FIREBIRD) is a two 1.5U CubeSat mission from the University of New Hampshire and Montana State University. It is investigating the size, persistence, and energy dependence of relativistic electron bursts from the inner radiation belts[10].

FIREBIRD is using amateur radio frequencies for downlink in the 145 MHz band. It has not received its IARU frequency authorization yet. The FIREBIRD team intends to use the FUNcube Dongle software-defined radio as the primary ground station radio[11].

3.4 DICE

The Dynamic Ionosphere CubeSat Experiment (DICE) mission from Utah State University and ASTRA contains two identical 1.5U CubeSats measuring ionospheric density and electric field variability associated with the formation of geomagnetic storm enhanced density plumes. These features have been observed to occur daily over the US during magnetic storm disturbances and are thought to severely disrupt terrestrial communication and navigation systems[12].

DICE contains an L3 Cadet radio, transmitting in the 460-470 MHz Meteorological-satellite (space-to-Earth) allocation. There are several footnotes to this allocation, including US201, which defines a maximum power flux-density at the Earth's surface. A link analysis shows the maximum power that the spacecraft can transmit is roughly 1 watt of power into the dipole antenna, even with the large bandwidth required for the high data rate[13].

This CubeSat is scheduled for launch on 27 October 2011 on the ELaNa3/NPP mission from Vandenberg, California, and is the first NSF CubeSat launched to have completed the NTIA spectrum certification and frequency authorization process.

3.5 CINEMA

The CubeSat for Ions, Neutrals, Electrons, MAgnetic fields (CINEMA) from UC Berkeley and Kyung Hee University (South Korea) is a focused investigation of energetic ions, electrons, and

neutrals at high ecliptic latitude, and will map out strong geomagnetic currents and energetic neutral atoms associated with stormtime precipitation. This science is important for fundamental space weather and space plasma physics research[14].

CINEMA has obtained their Stage 4 Spectrum Certification for the 2200-2290 MHz Space Research band. It uses a small 2.2 GHz Emhiser EDTC-01E1A102 transmitter that outputs 1 watt of RF power with a data rate of 1 Mbps. Kyung Hee University is also building an exact replica of CINEMA for launch at a later date[15].

3.6 CSSWE

The Colorado Student Space Weather Experiment (CSSWE) from the University of Colorado-Boulder will measure the energetics of solar-produced relativistic electrons and protons during periods of intense solar flare activity and its impacts on the Earth's outer radiation belts[16, 17].

The CSSWE team has elected to obtain an Experimental License through the FCC in the UHF Amateur Satellite band, and have received their allocation of 437.345 MHz from the IARU. They are using an AstroDev Lithium radio on the spacecraft and a Kenwood TS-2000 radio for the ground station[18].

3.7 CADRE

The Cubesat-investigating Atmospheric Density Response to Extreme driving (CADRE) mission from the University of Michigan proposes to measure the density and composition of a perturbed thermosphere using the novel Wind, Ion, and Neutral Composition Spectrograph (WINCS) sensor[19]. CADRE is the second NSF CubeSat award to the University of Michigan.

CADRE is one of the newest NSF CubeSats, awarded in Spring 2011. The team is still exploring communication subsystem options, but CADRE will most likely follow RAX with an amateur license in the 437 UHF Amateur Satellite band using an AstroDev Lithium radio. They are also planning an S-band downlink, with the radio and band still to be defined[20].

3.8 EXOCUBE

EXOCUBE, from Scientific Solutions Inc., Cal Poly, and the University of Wisconsin, is a 3U CubeSat that will measure global neutral and ion densities of select species using a mass spectrometer. Existing NSF ground radar sites will provide calibration data for the payload.

EXOCUBE is the newest NSF CubeSat, with funding awarded in September 2011. The team is planning to use the second-generation Cal Poly CubeSat bus, with an integrated Axsem 5042 transceiver chip[21]. This chip can tune from 400 to 470 MHz, but the team has not decided whether they are going to use amateur radio frequencies or apply for a federal allocation.

3.9 Summary

Of the current crop of NSF CubeSats, only three are going through the federal licensing process. The other four are using amateur radio frequencies, with the newest EXOCUBE undecided as to which path to take. In discussing the reasons for pursuing the amateur radio route, most of the teams noted that the amateur application process is much simpler and shorter than the federal

licensing process. Many of the teams are also familiar with the amateur radio process from building and launching prior CubeSats.

With respect to getting into orbit, Table 2 shows that most of the current NSF CubeSats are using the Educational Launch of Nanosatellites (ELaNa) program. Run by Garrett Skrobot at Kennedy Space Center, the ELaNa program provides inexpensive launches for educational projects. As a launch service for educational CubeSats, it integrates nicely with the educational requirements of the NSF CubeSat program, and there is close collaboration between the two programs[22].

4 Short-term Solutions

The short-term licensing solution for current NSF CubeSats includes using an allocation for an existing service. A CubeSat Developer needs only to determine which service they fit into, certify the hardware, and apply for a specific frequency. This process is described in the next three sections.

4.1 Potential Radio Services

All spectrums in the United States are allocated to a specific service, such as Broadcasting for television stations or Aeronautical Mobile for airplanes. Before a frequency can be requested, CubeSat developers must determine which service they fit into. The list below describes some possible radio services for current and future NSF CubeSats. These descriptions are taken from Article 1, Section III of the Radio Regulations[23].

Space Operation-Satellite: A radiocommunication service concerned exclusively with the operation of spacecraft, in particular space tracking, space telemetry and space telecommand.

Earth Exploration-Satellite Service: A radiocommunication service between Earth stations and one or more space stations, which may include links between space stations, in which:

- information relating to the characteristics of the Earth and its natural phenomena, including data relating to the state of the environment, is obtained from active sensors or passive sensors on Earth satellites;
- similar information is collected from airborne or Earth-based platforms;
- such information may be distributed to Earth stations within the system concerned;
- platform interrogation may be included.

Meteorological-Satellite Service: An Earth exploration-satellite service for meteorological purposes.

Space Research-Satellite: A radiocommunication service in which spacecraft or other objects in space are used for scientific or technological research purposes.

Table 3 in Appendix B shows a list of the allocations for the above services from 100 MHz to 6 GHz. For pertinent footnoes, see the official NTIA Red Book and FCC Table of Frequency Allocations.

4.2 Federal Licensing Process (NTIA)

Federally funded CubeSat projects must apply through their funding agency for Spectrum Certification and Frequency Authorization. Each funding agency has a group in charge of spectrum management. This group can help the team fill out the necessary paperwork, keep track of all the licensing requirements, etc. Figure 1 shows a flow diagram of this process.

4.2.1 Spectrum Certification

The NTIA spectrum licensing process consists of four steps, outlined below. If a CubeSat is federally funded by an agency other than the NSF, such as NASA or DOD, the same rules and procedures apply.

Step 1. Prepare NTIA Spectrum Certification Application by assembling basic technical data about the space-based and ground-based elements. This technical data should include all aspects of the communication system, such as transmitters, receivers, and antennas. This step can take several weeks, depending on how much technical data is provided by the equipment manufacturers.

Step 2. NSF (or other sponsoring agency) submits application to NTIA for Stage 4 (Operational Certification) for ground- and space-based elements. This application is submitted to the Spectrum Planning Subcommittee (SPS) of NTIA's Interdepartment Radio Advisory Committee (IRAC). It can take longer than 6 months to obtain spectrum certification.

At this point, a Certification of Spectrum Support document (Form NTIA-44) is generated, stating that the hardware used is capable of transmitting an appropriately clean RF signal within the stated bands. Hardware only needs to obtain Spectrum Certification once, so if a previous team has certified the hardware you do not need to do the previous two steps.

Once this document is obtained, the CubeSat developer begins the Frequency Authorization process to obtain a specific frequency for satellite communications. As of this writing, both CINEMA and DICE have obtained their Stage 4 Certification of Spectrum Support[24, 25].

4.2.2 Frequency Authorization

After the satellite and ground station hardware is certified, then specific frequency and modulation schemes can be applied for. This is called Frequency Authorization.

Step 3. Prepare Frequency Authorization Proposal for authorization to transmit at specific frequencies. This proposal describes the exact frequencies, modulation schemes, transmit power, antenna gain, orbit characteristics, etc., that the CubeSat developer would like to use. If all of the data are known, then the process of electronically preparing and submitting the assignment request is straightforward.

Step 4. NSF (or other sponsoring agency) submits Frequency Authorization Proposal to the Frequency Assignment Subcommittee (FAS) of the IRAC. If there are no problems with the request, and if neither the NTIA nor any other agency (including the FCC) objects to the assignment request, then the assignment may be approved in as little as two weeks. However, if there are problems with the

request, if other agencies are concerned with the proposed frequency use, or if the system does not comply with applicable rules, it may take weeks or months to get approval of the assignment, and some desired characteristics, such as frequency and power, may need to be modified.

After obtaining a Frequency Authorization, the CubeSat developer can now legally transmit on the specific frequencies outlined in the authorization.

As can be seen, this process takes a long time, potentially more than a year. For many CubeSat projects, this time is equal to or greater than designing, building, testing, and launching their satellite into space. Since the communications subsystem design is not finalized for several months after project kickoff, there is often not enough time to go through this process, which explains why CubeSat developers to go the amateur radio route[26, 27].

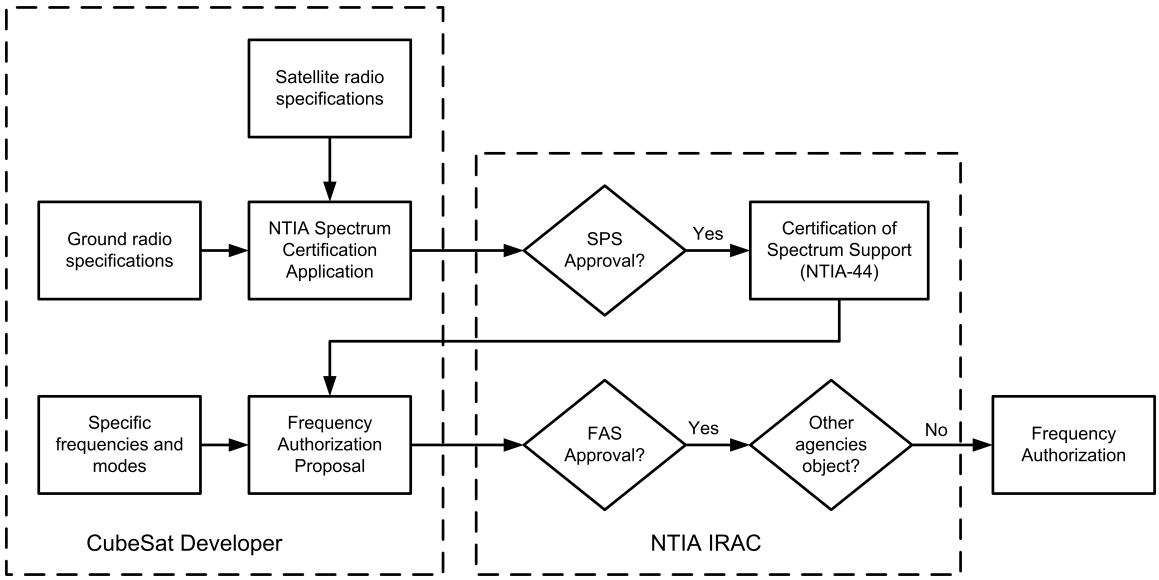

Figure 1: Flow diagram for the NTIA Spectrum Certification and Frequency Authorization process.

4.3 Non-Federal Licensing Process (FCC)

CubeSat programs whose main source of funding is not provided by the federal government, such as commercial companies, universities, individuals, or state space grant-type organizations, should apply to the FCC for spectrum certification and frequency authorization. The FCC rules governing all satellite communications are in 47 CFR Part 25. The FCC process is outside the scope of this paper.

5 Long-term Solutions

In addition to the short-term solutions outlined above, the NSF is working on a long-term solution that involves asking the International Telecommunications Union (ITU) and member states (US, Russia, France, etc.) which service small satellites fit under. This questionnaire is included in Appendix A.

Answers to these questions will define what a "small satellite" is, and determine which existing service these new small satellites fit under. Once this is determined, the small satellite community can begin looking for underutilized spectrum (within this existing service or different service) by performing spectrum surveys in their local neighborhoods. After determining ways to protect the primary users within the existing service, and if no existing users or member states object, the existing service definition can be changed, and a "small satellite" footnote or definition can be added to the ITU International Table of Frequency Allocations. After ratification by the US Congress, the NTIA and FCC draft the US laws regarding this new allocation, and modifications are made to the NTIA Red Book and FCC Table of Frequency Allocations. Defined users can then use this service for communications[28, 29].

This process takes many years. If all of the recommendations were approved and there were no objections, this process would take a minimum of eight years, making this new "small satellite" allocation a reality in 2020 or later.

6 Conclusion

While the Federal NTIA process can seem daunting to new CubeSat developers, the NSF is motivated to assist current and future NSF CubeSats navigate this maze and secure a federal frequency authorization. Federal frequency allocation is possible even with the reduced time schedules that CubeSat developers face.

While most CubeSat developers are focused on their short-term hardware delivery date, they should also be cognizant of the long-term ITU process of securing a "small satellite" chunk of spectrum. CubeSat developers can write papers in support of the questionnaire and conduct spectrum surveys to determine suitable frequencies.

6.1 Acknowledgements

Special thanks to Andy Clegg of the NSF for correcting and clarifying the NTIA licensing process, Richard Doe for clarifying and editing the science descriptions of the CubeSats, and Jan King for helping explain the complex ITU process.

References

[1] Jordi Puig-Suari, Clark Turner, and William Ahlgren. "Development of the Standard CubeSat Deployer and a CubeSat Class PicoSatellite." In proceedings of the 2001 IEEE Aerospace Conference. Big Sky, Montana. March 2001.

[2] Bryan Klofas. "Amateur Radio and the CubeSat Community." In Proceedings of the 2006 AMSAT-NA Symposium. San Francisco, CA. October 2006.

[3] Bryan Klofas, Jason Anderson, and Kyle Leveque. "A Survey of CubeSat Communication Systems." 5th Annual CubeSat Developers Workshop. San Luis Obispo, California. April 2008.

[4] Therese Jorgensen. "CubeSat-based Science Missions for Space Weather and Atmospheric Research: A new NSF Program." Presented at the 5th Annual CubeSat Developers Workshop. San Luis Obispo, California. April 2008.

[5] James Cutler, John Springmann, Sara Spangelo, and Hasan Bahcivan. "Initial Flight Assessment of the Radio Aurora Explorer." In proceedings of the 25th Annual AIAA/USU Conference on Small Satellites. SSC11-VI-6. Logan, Utah. August 2011.

[6] Hasan Bahcivan, Michael C. Kelley, and James W. Cutler. "Radar and rocket comparison of UHF radar scattering from auroral electrojet irregularities: Implications for a nanosatellite radar." Journal of Geophysical Research, Vol. 114, A06309. June 2009. doi:10.1029/2009JA014132.

[7] James Cutler et al. "Rax Power Panel Report." Fall 2011.

[8] James Cutler. Personal Communication. 1 October 2011.

[9] Douglas Rowland et al. "The NSF Firefly CubeSat Mission: Rideshare Mission to Study Energetic Electrons Produced by Lightning." IEEE Aerospace Conference. Paper 1405. October 2010.

[10] Brian Larsen. "Focused Investigations of Relativistic Electron Burst Intensity, Range, and Dynamics (FIREBIRD)." CubeSat Developers Workshop. San Luis Obispo, California. April 2009.

[11] Adam Gunderson. Personal Communication. 3 October 2011.

[12] Geoff Crowley et. al. "Dynamic Ionosphere Cubesat Experiment (DICE)." In proceedings of the 25th Annual AIAA/USU Conference on Small Satellites. SSC11-XII-6. August 2011.

[13] Geoff Crowley. "Dynamic Ionosphere CubeSat Experiment (DICE)." CubeSat Developers Workshop. San Luis Obispo, California. April 2010.

[14] David Glaser et al. "STEIN (SupraThermal Electrons, Ions and Neutrals), A New Particle Detection Instrument for Space Weather Research with CubeSats." In proceedings of the 23rd Annual AIAA/USU Conference on Small Satellites. SSC09-III-1. August 2009.

[15] David Glaser and Karla Vega. "CINEMA: CubeSat for Ions, Neutrals, Electrons, MAgnetic fields." CubeSat Developers Workshop. San Luis Obispo, California. April 2009.

[16] Xinlin Li, Scott Palo, and Rick Kohnert. "Small Space Weather Research Mission Designed Fully by Students." Space Weather, Volume 9. 28 April 2011.

[17] Muralikrishna Nallamothu. "The Colorado Student Space Weather Experiment (CSSWE)." Presented at the CubeSat Summer Workshop. Logan, Utah. August 2010.

[18] Scott Palo. Personal Communication. 14 September 2011.

[19] James Cutler, Aaron Ridley, and Andrew Nicholas. "Cubesat Investigating Atmospheric Density Response to Extreme Driving (CADRE)." In proceedings of the 25th Annual AIAA/USU Conference on Small Satellites. SSC11-IV-7. August 2011.

[20] James Cutler. Personal Communication. 15 September 2011.

[21] Austin Williams. "Compact, Reconfigurable UHF Communication System for use with PolySats Embedded Linux Platform." Cal Poly Master's Thesis. December 2010.

[22] Garrett Skrobot. "ELaNa: Educational Launch of Nanosatellite." Presented at the 8th Annual CubeSat Developers Workshop. San Luis Obispo, California. April 2011.

[23] International Telecommunications Union. "Radio Regulations, Volume 1: Articles." 2001 Edition.

[24] CINEMA Stage 4 Certification of Spectrum Support. Control Number SPS-18193/1. 6 September 2011.

[25] DICE Stage 4 Certification of Spectrum Support. Control Number SPS-18192/1. 6 September 2011.

[26] Andy Clegg. "Radio Spectrum Considerations for CubeSats." CubeSat Communications Workshop. San Francisco, California. December 2009.

[27] Andy Clegg. Personal Communication. 22 September 2011.

[28] Jan King. "Frequency Coordination Update, Etc." Presented at the CubeSat Summer Workshop. Logan, Utah. August 2011.

[29] Jan King. Personal Communication. 3 October 2011.

UNITED STATES OF AMERICA

DRAFT PROPOSALS FOR THE WORK OF THE CONFERENCE

Agenda Item 8.2: *to recommend to the Council, items for inclusion in the agenda for the next WRC, and to give its views on the preliminary agenda for the subsequent conference and on possible agenda items for future conferences, taking into account Resolution* ***806 (WRC-07)***

Background Information: The use of nanosatellites and picosatellites, satellites having mass less than 10 kg,[1] is increasing for a variety of applications, including meteorology, space research and telecommunications. A large number of administrations from all ITU regions have launched these satellites. Academic and research institutions are designing and developing many more projects, with launches planned over the next few years.

These satellite systems exhibit certain characteristics:

a) they are built at low cost using off-the-shelf equipment, often based on a standard structural design;[2]

b) they employ off-the-shelf radiocommunication hardware that is small, lightweight, economical, and adaptable to a wide variety of missions;

c) they are launched as secondary payloads when space is available on launch vehicles; thus the launch date is not known well in advance;

d) the launch vehicle deploys them in a low-Earth orbit, though orbital parameters are not known in advance with any precision;[3]

e) they generally have no attitude control and must use antennas with little directional gain for both uplinks and downlinks;

f) data download and command and control uplinks may involve a variety of earth stations depending on requirements, including earth stations not operated by those responsible for the satellite; and

g) their useful lifetime is unpredictable, but can range from a few weeks to a few years.

To date, a number of these satellites have been using frequency bands near 400 MHz allocated to the meteorological-satellite service or the amateur-satellite service for data downlinks, though the satellite mission may not be consistent with those services. This proposal addresses the need for one or more frequency bands to support command, control, and data relay for nanosatellites and picosatellites performing a variety of functions. It also addresses regulatory procedures for these satellites.

[1] The terms *nanosatellite* and *picosatellite* may refer to satellites having mass in the range 1-10 kg, or less than 1 kg, respectively.

[2] The academic and amateur-satellite communities, and others, developed the *Cubesat* standard for low-cost satellites in the late 1990's; the basic *Cubesat* standard, now widely adopted, consists of a 10 cm cube with mass of about 1 kg; a nanosatellite may consist of several stacked *Cubesat* modules; some launch vehicles include spring-loaded containers designed to deploy satellites built to the *Cubesat* standard.

[3] The trajectory of the launch vehicle, which is optimized for delivery of the primary payload, largely determines the orbital parameters of the nanosatellite or picosatellite.

Proposal:

ADD USA/8.2/1

RESOLUTION XXX (WRC-12)

Preliminary Agenda for the 2019 World Radiocommunication Conference

Reasons: To add a new item to the preliminary agenda of WRC-19.

ADD USA/8.2 /2

2.AA to consider the results of ITU-R studies, and based on the studies designate up to 10 MHz of spectrum, along with appropriate regulatory procedures, to accommodate command, control and data relay for nanosatellites and picosatellites in the 400-2 025 MHz range, in accordance with Resolution **[ZZZ] (WRC-12)**.

Reasons: Nanosatellites and picosatellites have characteristics unlike those of larger satellites and provide a growing variety of functions, mostly in meteorology, space research, and Earth sciences.

ADD USA/8.2/3

RESOLUTION ZZZ (WRC-12)

Studies for identifying up to 10 MHz of spectrum for the space research service in the 400-2 025 MHz range for the operation of nanosatellites and picosatellites

The World Radiocommunication Conference (Geneva, 2012),

considering

a) that nanosatellites and picosatellites are low-cost satellites having mass no greater than 10 kg;

b) that the lifetime of these satellites ranges from a few weeks to a few years;

c) that these satellites are increasingly used in studies of the Earth, the Earth's atmosphere and the near-Earth environment, and in a variety of other fields;

d) that these satellites have distinctive characteristics that affect spectrum and regulatory requirements for command, control and data relay;

e) that it is desirable to have a designated band to accommodate command, control and data relay for these satellites;

A ITU Proposal for Agenda Item

f) that it is also desirable to have regulatory provisions for these satellites that take into account their unique characteristics;

g) that some experiments require the simultaneous operation of several such satellites and that fifty or more of these satellites may be released during a single launch;

recognizing

a) the need to protect existing services in the 400-2 025 MHz range;

b) that the requirements in Article 9 for the advanced publication of information of satellite systems that is not subject to coordination and Article 11 for notification and recording of frequency assignments apply,

resolves to invite ITU-R

1 to conduct studies to identify up to 10 MHz in the 400-2 025 MHz range to accommodate command, control and data relay operations for nanosatellites and picosatellites, while ensuring the protection of the services, particularly safety-of-life services, allocated to these bands;

2 to study the regulatory procedures applicable to these satellites,

resolves to invite WRC-19

1 to review the results of the studies in *resolves to invite ITU-R* 1 and 2, with a view to provide a designated band or bands in the space research service to accommodate command, control and data relay for nanosatellites and picosatellites on a primary, worldwide basis;

2 to consider appropriate modifications to the Table of Frequency Allocations and to develop appropriate regulatory provisions based on proposals from administrations,

invites administrations

to participate actively in the studies by submitting contributions to ITU-R.

Reasons: Nanosatellites and picosatellites that have distinctive characteristics and are increasingly used for many purposes require a designated band that can be used for operations, including command, control, and data transmission.

ATTACHMENT

PROPOSAL FOR AGENDA ITEM

Subject: Proposed Future Agenda Item for WRC-2019, to conduct studies to identify up to 10 MHz in the 400-2 025 MHz range, designated for the operations of nanosatellites and picosatellites,
Origin: United States of America

Proposal: to consider the results of ITU-R studies, and based on the studies to identify up to 10 MHz of spectrum in the 400-2 025 MHz range, in order to support operations of nanosatellites and picosatellites, in accordance with Resolution [ZZZ] (WRC-12***).***

Background/reason*:* The use of nanosatellites and picosatellites is increasing for a variety of applications, including meteorology, space research, and telecommunications. The increasing variety of activities that are conducted from these satellites makes it necessary to find a dedicated band for their operations, under a suitable service.
Radiocommunication services concerned*:* services operating in the 400-2 025 MHz bands.

Indication of possible difficulties: TBD

Previous/ongoing studies on the issue*:* TBD

Studies to be carried out by*:* WP 7B	with the participation of**:** ***WP 4C, WP 5B, and WP7C***

ITU-R Study Groups concerned*:* SG7

ITU resource implications, including financial implications (refer to CV126)**:** ***Minimal***

Common regional proposal*:* Yes/No	***Multicountry proposal****:* Yes/No Number of countries**:**

Remarks

B Potential Frequency Bands

Table 3 is an excerpt from the NTIA Red Book. It shows the frequency allocations in the 100 MHz to 6 GHz range only for the services listed in Section 4.1. A blank cell means that the users have no privileges in that frequency range.

Footnotes listed next to the Service, such as the G42 footnote next to the Space Operations allocation in the 1755-1850 MHz frequency range, apply to that service only. Footnotes listed at the bottom of the cell indicate that all services are restricted by these footnotes, such as 5.392 and US303 in the 2200-2290 MHz frequency range. Footnotes are listed in the NTIA Red Book and FCC Table of Frequency Allocations, and readers are encouraged to understand them because several footnotes greatly restrict the communications potentials of specific bands.

There may be other services sharing the frequencies listed below. Refer to the official tables in the NTIA Red Book and the FCC Table of Frequency Allocations for details.

Services in capital letters (EARTH EXPLORATION-SATELLITE) indicate the primary user. Services with only the first letter capitalized (Earth exploration-satellite) indicate secondary users that must not create any interference to primary users and must accept any interference received.

Table 3: Potential CubeSat frequency bands 100 MHz to 6 GHz based on allocation.

Frequency	**Federal Table**	**Non-Federal Table**
137-137.025 MHz	SPACE OPERATION (space-to-Earth) METEOROLOGICAL-SATELLITE (space-to-Earth) SPACE RESEARCH (space-to-Earth)	
137.025-137.125 MHz	SPACE OPERATION (space-to-Earth) METEOROLOGICAL-SATELLITE (space-to-Earth) SPACE RESEARCH (space-to-Earth)	
137.175-137.825 MHz	SPACE OPERATION (space-to-Earth) METEOROLOGICAL-SATELLITE (space-to-Earth) SPACE RESEARCH (space-to-Earth)	
137.825-138 MHz	SPACE OPERATION (space-to-Earth) METEOROLOGICAL-SATELLITE (space-to-Earth) SPACE RESEARCH (space-to-Earth)	
400.15-401 MHz	METEOROLOGICAL-SATELLITE (space-to-Earth) SPACE RESEARCH (space-to-Earth) 5.263 Space operation (space-to-Earth) 5.264	SPACE RESEARCH (space-to-Earth) 5.263 Space operation (space-to-Earth) 5.264 US319
401-402 MHz	SPACE OPERATION (space-to-Earth) EARTH EXPLORATION-SATELLITE (Earth-to-space) METEOROLOGICAL-SATELLITE (Earth-to-space) US345 US384	SPACE OPERATION (space-to-Earth) Earth exploration-satellite (Earth-to-space) Meteorological-satellite (Earth-to-space) US345 US384

Table 3: Potential CubeSat frequency bands 100 MHz to 6 GHz based on allocation.

Frequency	**Federal Table**	**Non-Federal Table**
402-403 MHz	EARTH EXPLORATION-SATELLITE (Earth-to-space) METEOROLOGICAL-SATELLITE (Earth-to-space) US345 US384	Earth exploration-satellite (Earth-to-space) Meteorological-satellite (Earth-to-space) US345 US384
410-420 MHz	SPACE RESEARCH (space-to-space) 5.268 US13 G5	 US13
460-470 MHz	Meteorological-satellite (space-to-Earth) 5.287 5.288 5.289 US73 US201 US209	
1215-1240 MHz	EARTH EXPLORATION-SATELLITE (active) SPACE RESEARCH (active) 5.332	Earth exploration-satellite (active) Space research (active)
1240-1300 MHz	EARTH EXPLORATION-SATELLITE (active) SPACE RESEARCH (active) 5.332 5.335	Earth exploration-satellite (active) Space research (active) 5.282
1400-1427 MHz	EARTH EXPLORATION-SATELLITE (passive) SPACE RESEARCH (passive) 5.341 US246	
1660.5-1668.4 MHz	SPACE RESEARCH (passive) 5.341 US246	
1675-1700 MHz	METEOROLOGICAL-SATELLITE (space-to-Earth) 5.289 5.341 US211	
1700-1710 MHz	METEOROLOGICAL-SATELLITE (space-to-Earth) 5.289 5.341	METEOROLOGICAL-SATELLITE (space-to-Earth) 5.289 5.341
1755-1850 MHz	SPACE OPERATION (Earth-to-space) G42	
2025-2110 MHz	SPACE OPERATION (Earth-to-space) (space-to-space) EARTH EXPLORATION-SATELLITE (Earth-to-space) (space-to-space) SPACE RESEARCH (Earth-to-space) (space-to-space) 5.391 5.392 US90 US222 US346 US347 US393	

Table 3: Potential CubeSat frequency bands 100 MHz to 6 GHz based on allocation.

Frequency	**Federal Table**	**Non-Federal Table**
2200-2290 MHz	SPACE OPERATION (space-to-Earth) (space-to-space) EARTH EXPLORATION-SATELLITE (space-to-Earth) (space-to-space) SPACE RESEARCH (space-to-Earth) (space-to-space) 5.392 US303	
2655-2690 MHz	Earth exploration-satellite (passive) Space research (passive) US205	Earth exploration-satellite (passive) Space research (passive) US385
2690-2700 MHz	EARTH EXPLORATION-SATELLITE (passive) SPACE RESEARCH (passive) US246	
3100-3300 MHz	Earth exploration-satellite (active) Space research (active) US342	Earth exploration-satellite (active) Space research (active) US342
4990-5000 MHz	Space research (passive) US246	
5250-5255 MHz	EARTH EXPLORATION-SATELLITE (active) SPACE RESEARCH (active) 5.447D 5.448A	Earth exploration-satellite (active) Space research
5255-5350 MHz	EARTH EXPLORATION-SATELLITE (active) SPACE RESEARCH (active) 5.448A	Earth exploration-satellite (active) Space research (active) 5.448A
5350-5460 MHz	EARTH EXPLORATION-SATELLITE (active) 5.448B SPACE RESEARCH (active) US390 G130	Earth exploration-satellite (active) 5.448B Space research (active) US390
5460-5470 MHz	EARTH EXPLORATION-SATELLITE (active) SPACE RESEARCH (active) 5.448B US49 G130	Earth exploration-satellite (active) Space research (active) 5.448B US49
5470-5570 MHz	EARTH EXPLORATION-SATELLITE (active) SPACE RESEARCH (active) 5.448B US50 G131	Earth exploration-satellite (active) 5.448B Space research (active) US50

OSCAR Zero from a Satellite Operator's Perspective

Sawson Taheri

Abstract

Amateur radio stations capable of operating linear transponder equipped artificial satellites already have the hardware required to contact other amateur stations using the surface of the moon as a passive reflector. This paper will discuss and analyze the hardware and software requirements for making two way Earth-Moon-Earth contacts from a satellite operator's perspective.

1. Introduction

Advancements in digital coding schemes made over the past decade allow many linear transponder capable satellite stations to make two way radio contact using Oscar "Zero", the moon, as a passive reflector. The software package Weak Signal by Joe Taylor, WSJT[6], contains several digital modes optimized for various weak signal radio paths. Development of the JT65[14,20] digital protocol provided in WSJT has dramatically reduced the hardware requirements for Earth-Moon-Earth (EME) communication. 144 MHz yagi antennas as small as two, three or four elements have successfully been used in making EME contacts[1,2,3,4,5]. The approximate 252 dB loss along the EME path highlights such remarkable achievements. JT65's distinction from other digital schemes used in amateur radio is not only its sensitivity, but also the human element involved. Unlike most other digital modes, operator skill and understanding of the mode play a substantial role in decoding messages. JT65 is similar to one of the oldest digital modes, Morse code, in which a skilled operator can copy messages a novice can not. The first part of this paper discusses the hardware requirements for making EME contacts. The second part of this paper discusses software configuration and contact procedures. With an exceptionally large path loss, no aspect of the system can be overlooked. The recommendations in this paper should be adhered to collectively to ensure success.

2. Hardware Requirements

Many amateur radio operators still carry notions from the prior century regarding the hardware required to complete a two-way radio contact using the surface of the moon as a passive reflector. Virtually any well optimized station capable of operating linear transponder satellites can "hear" signals off of the moon. Those stations capable of outputting a hundred watts or more are capable of making a two way contact. A typical amateur radio satellite station already contains the required hardware; yagi antennas for the 144 MHz and 432 MHz bands mounted on two axis rotors and a single sideband capable radio with a computer sound card interface.

2.1 Antenna

Given ideal conditions, virtually any yagi antenna is suitable for JT65 based EME communication. Even a three element yagi antenna made of measuring tape and PVC pipe has been demonstrated to be sufficient[4]. Stations using a low-noise amplifier (LNA) placed as close to the antenna feed point as possible will have the most success. A station not utilizing a LNA needs to be mindful of coax losses, as coax loss adds directly to the system noise figure. Times Microwave LMR®-400 coaxial cable attenuates a 150 MHz signal by 3 dB over a 200 ft length. The 3 dB loss is added directly to a receiver's noise figure. This 3 dB loss effectively would be the same as using a yagi antenna with approximately half the boom length, and mounting the receiver at the feed point. A 3 dB loss is substantial along the EME path. Basic mathematic modeling and comparison of benefits provided by LNAs on the 144 MHz, 432 MHz and 1296 MHz amateur bands are provided in Appendix A.

On the amateur bands from 432 MHz and below, virtually all EME transmissions are linearly polarized. Due to geometrical[18] and Faraday [9,18] rotations, a transmitted radio wave reflected off of the moon's surface is often optimally received at a different polarity than it was transmitted. Signal attenuation due to polarity mismatch between two linearly polarized radio waves can be defined as $attenuation = 10\log(\cos^2\theta)\ (dB)$*, graphed in Figure 1. A 45° polarity mismatch costs 3 dB of attenuation. A 3 dB loss on the EME path can be the difference between being completing a two way contact or not being able to detect a signal at all. Stations with fixed polarity antennas need to compensate for attenuation due to polarity mismatch with more antenna gain, or patiently keep attempting to make contact until Faraday rotation favorably aligns polarities.*

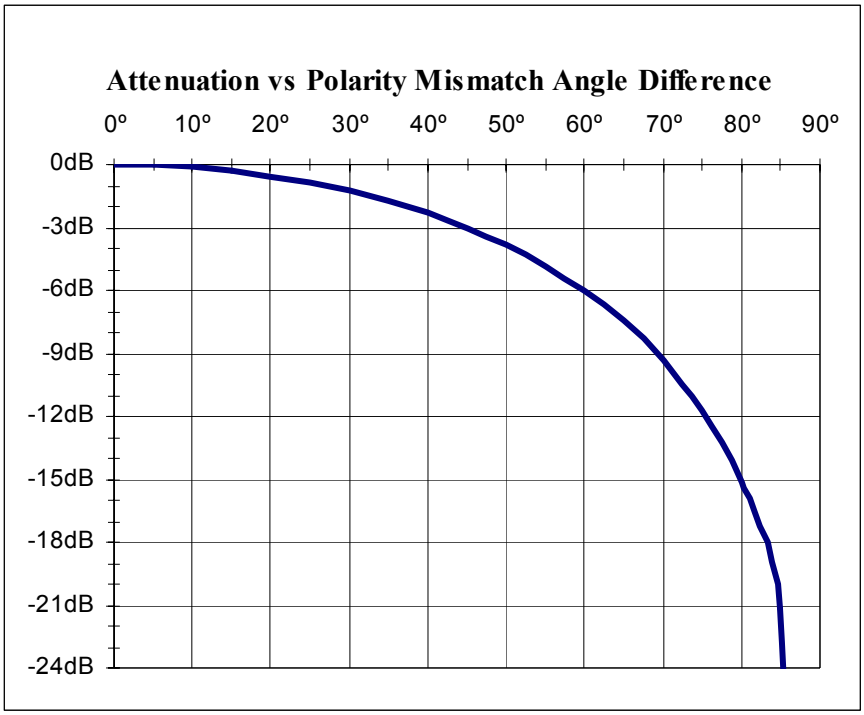

Figure 1. Signal loss due to signal to antenna polarity mismatch

It is common to use circularly polarized antennas for satellite communications. Circular polarization consists of two perpendicular linearly polarized waves, 90° out of phase. Circularly polarized antennas only receive the in-phase component of a linearly polarized transmitted signal. This results in a 3 dB loss when mixing a linear wave with a circularly polarized antenna, regardless of the linear wave's angle. As a result, for EME use from 432 MHz and below, compared to linearly polarized antennas, circularly polarized antennas have a disadvantage when polarity mismatch is 45° or less, but an advantage when the mismatch is above 45°.

For those wanting to gauge their current antenna's performance versus alternatives, or explore potential upgrades, VE7BQH provides a valuable chart[16] comparing characteristics of several popular 144 MHz yagi antenna designs. Generally speaking, for a given boom length, a high gain and a high G/T is desired, but each station is unique to its constraints and requirements.

2.2 Amplification

Use of a RF amplifier is not mandatory, but highly beneficial. 50-100 watts can be sufficient when attempting to contact larger EME stations. Many operators will find that while they can receive EME signals, their transmissions are not copied. This may be due to the 10 dB difference in transmitted power between the two stations, as many EME stations use amplifiers which output 500-1000 watts or more. This predicament can be partially compensated by software as discussed in section 3.6 or with hardware by using a RF amplifier. To keep transmission line loss at a minimum, the amplifier should be placed as close to the antenna feed point as possible. Doing so is especially helpful if the amplifier contains a built in LNA or coax loss is in excess of 1 dB.

2.3 Radio and Computer Interface

Making radio contact along the lunar path with limited antenna gain and power is made possible by a computer based digital mode. A radio to computer sound card interface is required. Interfaces used for other popular amateur radio digital modes such as RTTY and PSK31 are adequate for use with all modes provided by WSJT. WSJT can be used on computers that comfortably run Windows, Macintosh, or most UNIX like operating systems. Tests should be made to confirm the computer, monitor, router, switching power supplies and other supporting computer equipment do not introduce noise into

the receiver. Devices suspected of introducing noise should be turned off to determine whether a drop in the SpecJT noise floor decibel meter, discussed in section 3.3, is observed.

3. Software Configuration and Use

The software package Weak Signal by Joe Taylor, WSJT, contains several digital modes optimized for various weak signal radio paths. WSJT contains three output windows, a main window, a console window and a SpecJT waterfall window. The JT65 mode contained in WSJT is optimized for the EME path and is currently the de facto mode used for such contacts. JT65 is a Frequency Shift Keyed protocol with tight tolerances in both the time and frequency domains, utilizing compression and error correction. As a result of the compression and error correction algorithms used, changing a single character in the original message will make its JT65 encoded equivalent significantly dissimilar, thus easy to distinguish. This message dissimilarity, mixed with the tight frequency and time tolerances allow for the decoding of JT65 messages under very weak signal conditions. JT65 transmissions only contain a single frequency at any moment of time. There are different types of messages that can be sent using the JT65 protocol. The Tx1-Tx6 *messages as shown in Figure 3 provide an example message set. Up to 13 random characters may also be sent, but their unstructured nature results in several less dB of sensitivity, or coding gain. The messages RO, RRR, and 73 are referred to as short hand because they only send two bits of information, thus giving them 5 dB of coding gain over standard JT65 messages.*

Using moon tracking and prediction software is convenient, but not necessary. The WSJT main window provides real time tracking information of the moon relative to your location. Software currently in use at many amateur satellite stations is also capable of tracking the moon.

3.1 Clock Synchronization

*An imperative aspect of the JT65 protocol is clock synchronization. The clocks of all JT65 users must be synchronized with each other. Using BktTimeSync[7] is one method to achieve proper clock synchronization under Microsoft Windows based operating systems. Figure 2 shows the suggested BktTimeSync settings. One method users of *NIX based operating systems may achieve clock synchronization is by running or automating the command* ntpdate pool.ntp.org *several times an hour. The importance of accurate clock synchronization can not be over stated. Never attempt to use any of the WSJT modes without a properly synchronized computer clock.*

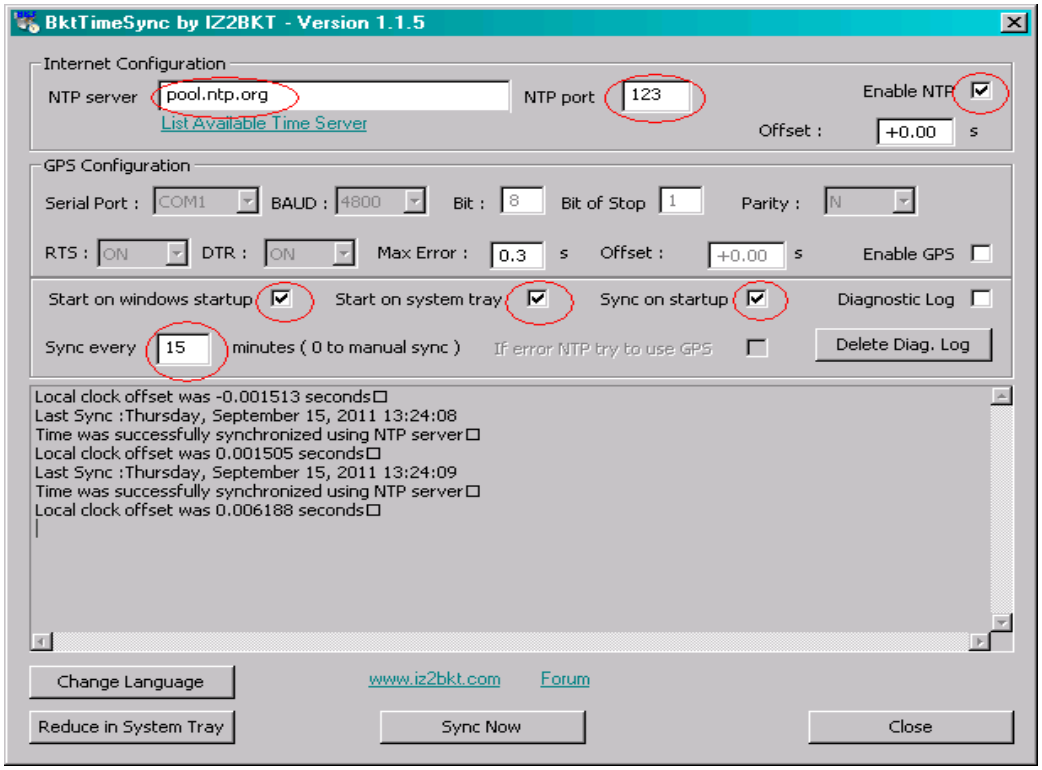

Figure 2. Suggested BktTimeSync settings

3.2 Tracking the Moon

Most software packages used to track amateur satellites also have built in functionality to predict and track the moon. SatPC32 includes a programs titled SuM and SuMListen. Nova for Windows and Ham Radio Deluxe's HRD Satellite Tracking also offer the same functionality. All three of these software packages provide automated rotor tracking control, but it is not needed. Due to the relatively slow passing of the moon across the sky and relatively wide front lobe of yagi antennas utilized in most satellite stations, manual tracking of the moon is sufficient.

The website Make More Miles on VHF[10] *provides a monthly chart displaying the moon's distance to Earth, the moon's declination and an estimated EME path degradation (dB) as a function of time. Optimal conditions are generally predicted the degradation is lowest. Declination is how many degrees above Earth's equatorial plane the moon passes. Most operators in the northern hemisphere can equate higher moon declination to a higher elevation satellite pass, thus a longer pass time, larger footprint and larger Doppler shift.*

3.3 WSJT Configuration

Upon launching WSJT version 9[6] *the console, main and SpecJT waterfall windows are displayed. WSJT requires several configuration changes for optimal JT65 based EME operation. In the main window, under the* Setup *menu check* Double-Click on callsign sets TxFirst *and* Monitor ON at startup *as shown in Figure 3.*

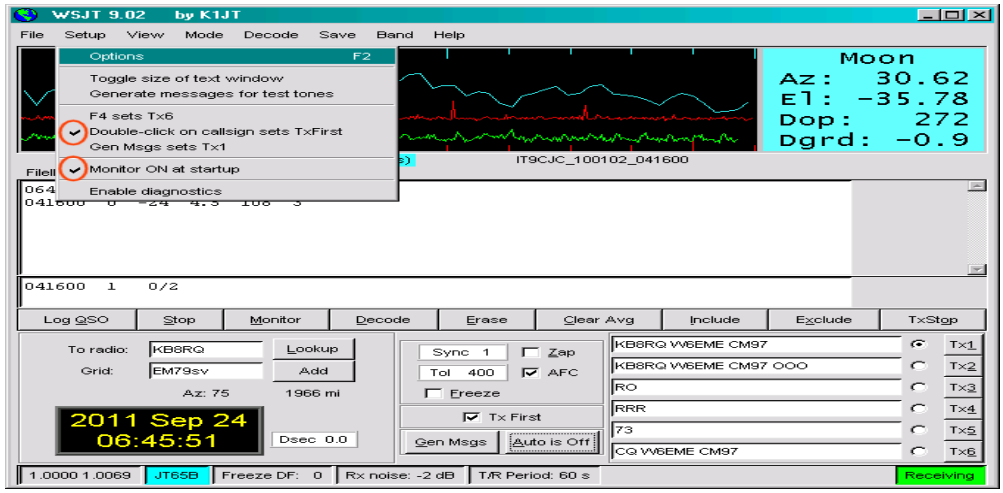

Figure 3. WSJT main window setup

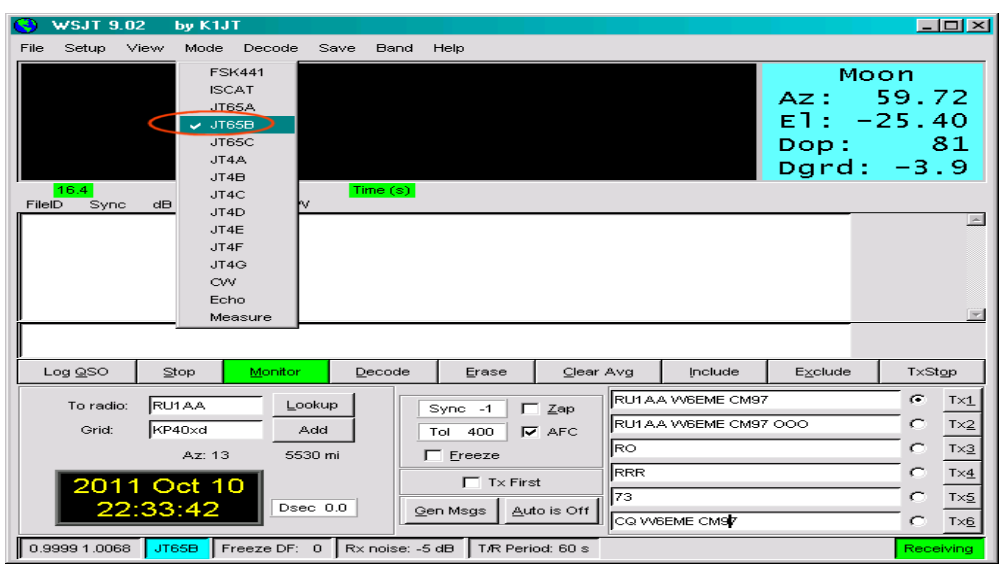

Figure 4. WSJT Mode selection

JT65 has three sub-modes optimized for different EME bands. JT65A is ideal for 50 MHz. JT65B is ideal for 144 MHz and 432 MHz. JT65C is ideal for 1296 MHz. The B and C variants are wider bandwidth and accommodate for the extra frequency shift observed due to VFO instability and Doppler. As a result, each higher sub-mode is 1 dB less sensitive. Select the appropriate sub-mode as shown in Figure 4.

The operator's call and maiden head grid locator must be entered into the Setup → Options *window as shown in Figure 5. The* ID Interval *transmits the operator's call sign in Morse code at the set time interval to comply with their governing body's licensing regulations. The* PTT Port *is the serial communication port number used to trigger the radio into transmit mode. Many computer sound cards have sampling rate error. To compensate for this, leave WSJT running for a period of time to stabilize, then enter the* Rate In *and* Rate Out *values as shown on the bottom left corner of the main WSJT window. There is no need to correct for sampling rate errors if the value shown is within 0.9995 to 1.0005.*

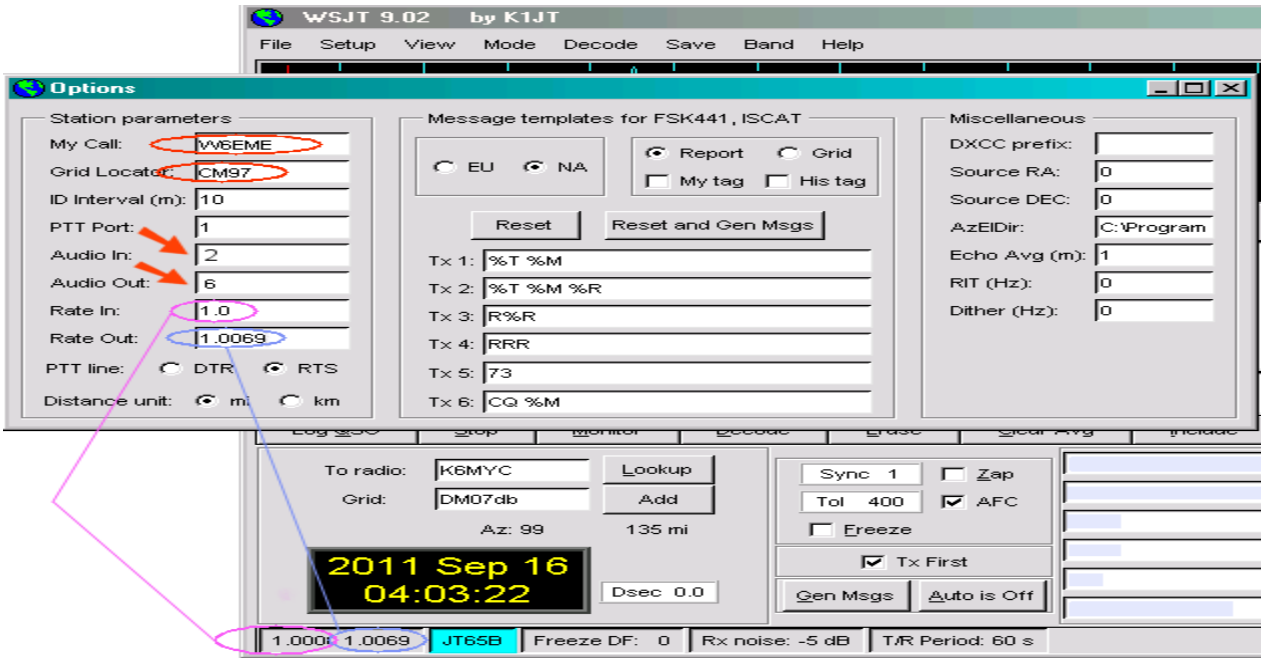

Figure 5. WSJT Setup → Options Configuration Window

Selection of the Audio Out *and* Audio In *fields in the WSJT* Setup → Options *window requires analysis of the information presented in the WSJT Console window shown in Figure 6. In this example Realtek AC97 Audio is the device name for the sound card connected to the radio. Note audio device* 2 *states it has* 2 *input channels, thus* 2 *is our* Audio In *value in the WSJT* Setup → Options *window. Note audio device* 6 *states it has* 2 *output channels, thus* 6 *is our* Audio Out *value in the WSJT* Setup → Options *window. Closing and restarting of WSJT is required when making audio device changes.*

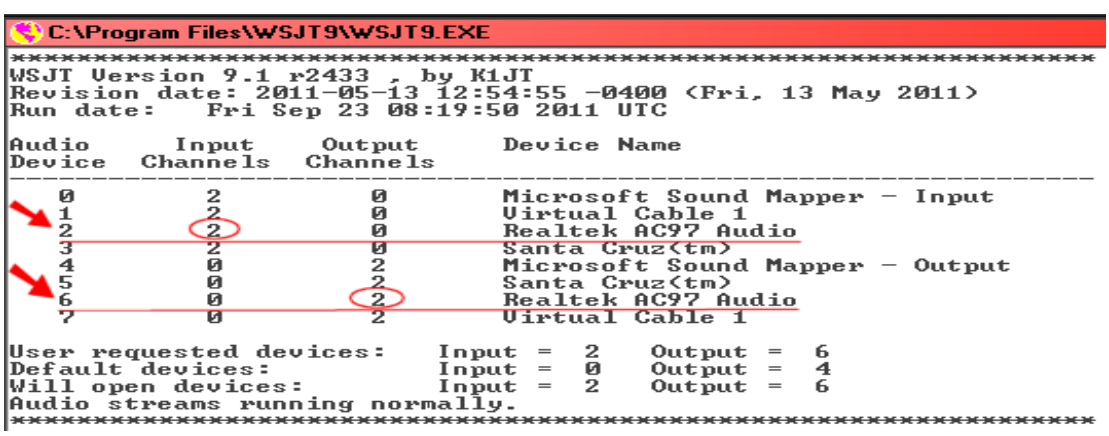

Figure 6. WSJT Console Output Window

In the SpecJT window options should be selected as shown in Figure 7. While tuned to a quiet frequency, the bottom right slider should be adjusted to zero out the Rx Noise *floor bar graph on the bottom right corner of the window. The same* Rx Noise *value is displayed in the bottom middle of the main WSJT window. As the antenna starts aiming at higher elevations, the noise floor may drop and should be zeroed out again.*

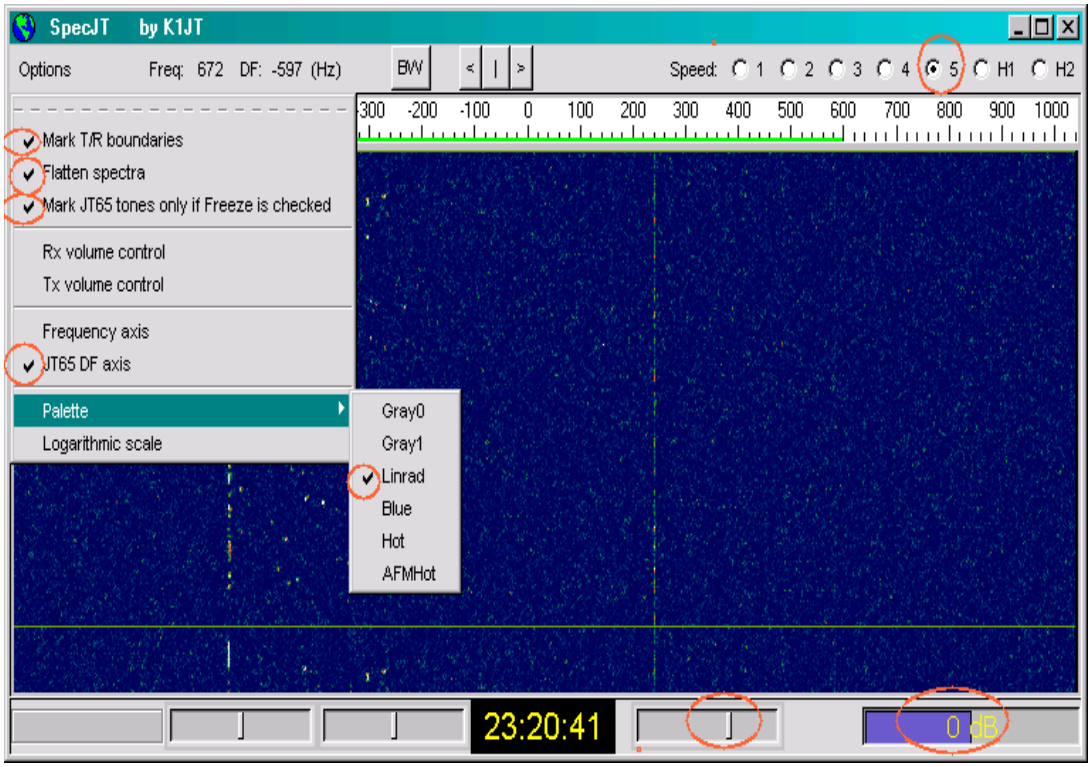

Figure 7. Suggested SpecJT settings

3.4 Doppler

Satellite operators are familiar with the use of Doppler correction. Lunar Doppler shift is not critical at VHF or UHF frequencies. Maximum Doppler shift for the moon is roughly 440 Hz at 144 MHz and 1.3 kHz at 432 MHz, thus it can easily be contained within the 2 kHz bandwidth of the SpecJT waterfall. Once another station's grid square is entered in the Grid: *field in the main WSJT window, as shown in Figure 8, pressing [SHIFT] F10 will bring up the Astronomical Data window, showing your own Doppler shift, as well as the other DX station's Doppler shift. The proper Frequency band must be selected under the Band menu as shown in Figure 8 for Doppler calculations to be accurate.*

3.5 Contact Procedure

JT65 is essentially a macro driven mode. Operators generally are not exchanging random information by typing messages on a keyboard. The vast majority of JT65 contacts are made by clicks of a computer mouse not clicks of a keyboard. The auto generated Tx1-Tx6 *messages shown in Figure 8 provide all the messages required to make a valid contact. The basic procedures for making JT65 contacts are covered in the WSJT User's Guide and Reference Manual. The manual file is named WSJT_User_600.pdf and located in the WSJT install directory. Beginners should download the WSJT sample files*[13] *and run through the step by step decoding tutorial listed in the User's Guide.*

In the main WSJT window, right click on Sync and set it to -1 *to reduce the minimum synchronization tolerance threshold. This will increase both the decoder's sensitivity and the likelihood of false decodes, thus the questions brought up in section 3.6 will need to be adequately answered by the operator before the decode is deemed valid. The* AFC *checkbox allows a decode if the sync line, labeled in Figure 11, drifts. If a decode fails due to the received sync line not being completely vertical, attempt to decode the message again by selecting the* AFC *checkbox and then clicking the* Decode *button. It is good practice to try different parameters and attempt to re-decode a message whose initial decoding has failed.* AFC *usage costs*

~1 dB of coding gain, underscoring the importance of VFO frequency stability on both sides of the EME path. Use the Zap *check box when attempting to ignore spurious carriers contained between the JT65 signal bandwidth, noted as the spectrum between tic marks A and E in Figure 11. Due to tight JT65 time tolerances, transmission start and stop times are controlled by software. When the* Auto is OFF *button* is clicked and toggled to Auto is ON, *WSJT is put into transmit mode where a checked* Tx First *box will transmit the selected* Tx1-Tx6 *message at the start of even numbered minutes. An unchecked* Tx First *box will cause WSJT to transmit at the start of odd numbered minutes.*

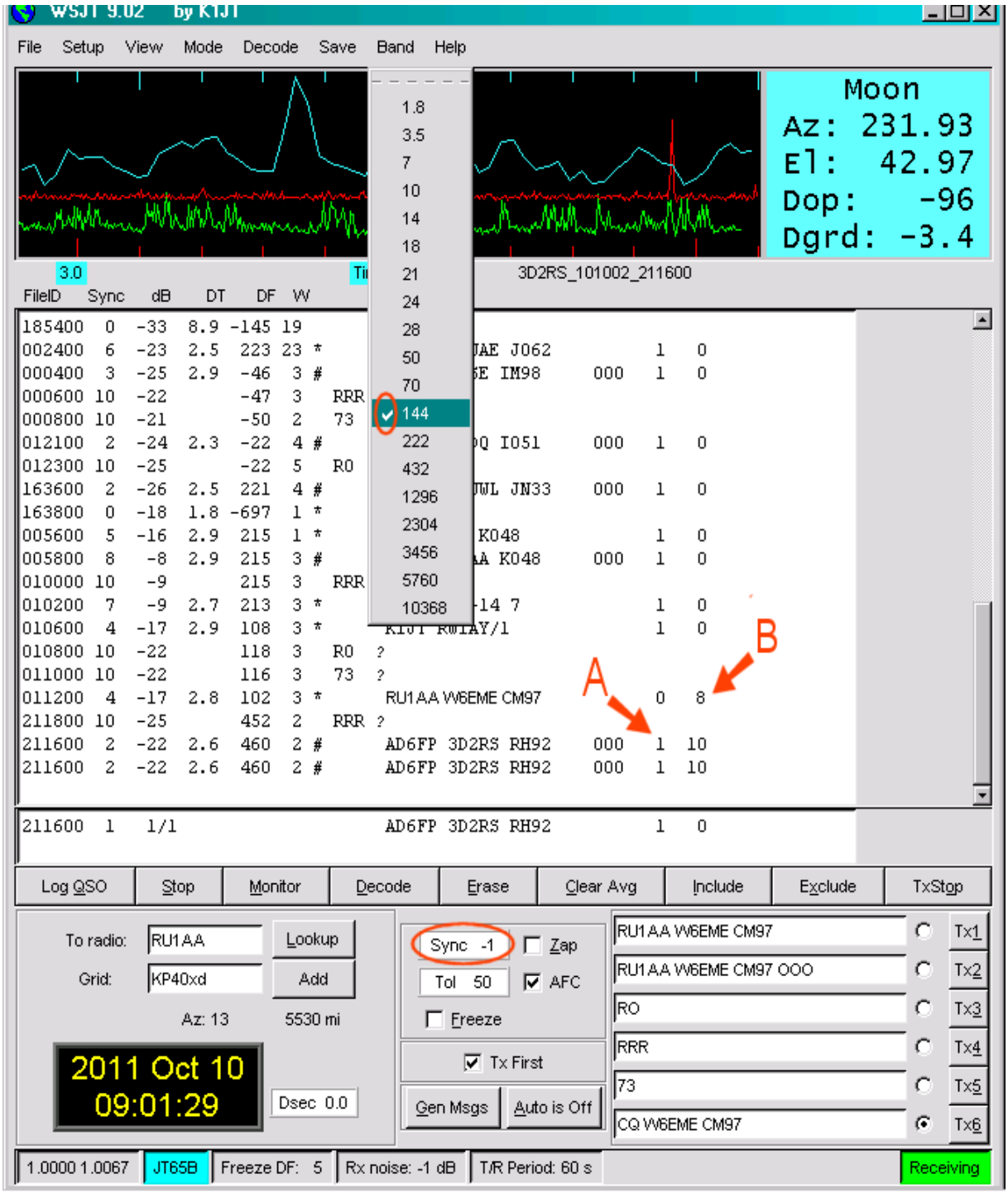

Figure 8. Main WSJT Window

EME contacts are held to high requirement of information exchanged before a contact is considered valid. It is convention both stations must copy both call signs, an exchange, and acknowledgement the exchange was received. JT65 contacts meet this requirement and often also include an additional piece of information, a grid square. For EME, the common exchange is OOO, which means both of the call signs have been copied. Reception of an OOO is acknowledged by the receiving station with a Roger, followed by an O of his own, RO, which means Roger, I have received both of our call signs and the report, your report is a O. Figure 9 demonstrates a sample contact where starting at 00:00:00 UTC a station with the call sign W6EME is calling CQ and a station with the call sign DX4DX answers him via the EME path.

Time (Min:Sec)	**Message Transmitted**	**Comment**
00:01 to 00:48	**CQ W6EME CM97**	The station W6EME is calling CQ and will listen for a reply starting at 01:00
00:50 to 01:00		The ~2.5 second path delay causes DX4DX to finish receiving W6EME's signal at 00:50. DX4DX has 10 seconds to successfully decode W6EME signal and reply.
01:01 to 01:48	**W6EME DX4DX PK23**	The Station DX4DX has received/decoded W6EME's CQ and replies.
01:50 to 02:00		W6EME has 10 seconds to decode any station(s) calling him and reply. If no station is decoded, he will continue transmitting his existing message, CQ. If there are multiple callers, W6EME will decode and reply to one caller now, then decode additional callers while he transmits from 02:01 to 02:48.
02:01 to 02:48	**DX4DX W6EME OOO**	W6EME has decoded DX4DX's reply and sends the EME exchange OOO.
02:50 to 03:00		DX4DX has 10 seconds to decode W6EME's message and reply accordingly. If W6EME is found to still be calling CQ, DX4DX will continue to call him.
03:01 to 03:48	**RO**	DX4DX has received his OOO exchange, and acknowledges by sending a Roger, and O exchange, RO, to W6EME.
03:50 to 04:00		As true with many short hand messages, shortly after the 03:04 mark, W6EME could visually see the two parallel lines representing the short hand message RO, thus he did not need the WSJT decoder to validate the message received.
04:01 to 04:48	**RRR**	W6EME has received the Roger, acknowledging his transmitted OOO report was received by DX4DX and received an O report of his own from DX4DX, thus he acknowledges receiving the RO by sending Roger Roger Roger, RRR
04:50 to 05:00		As true with many short hand messages, shortly after the 04:04 mark, DX4DX could visually see the two parallel lines representing the short hand message RRR, thus he did not need the WSJT decoder to validate the message received.
05:01 to 05:48	**73**	DX4DX acknowledges receiving RRR and sends 73 letting W6EME know the contact is over. He can click Log QSO.
05:50 to 06:00		As true with many short hand messages, shortly after the 05:04 mark, W6EME could visually see the two parallel lines representing the short hand message 73, thus the QSO is over. He can click Log QSO.
06:01 to 06:48	**CQ W6EME CM97**	W6EME could reply back with a 73 letting DX4DX know the contact is over, but in the interest of time and efficiency calls CQ instead. Upon receiving this CQ in the next period, DX4DX knows the 73 he sent was received by W6EME.

Figure 9. Conventional JT65 EME Exchange Protocol

There are several observations to be made from the exchange in Figure 9. W6EME is transmitting in the first period which is even numbered minutes in the JT65 protocol. DX4DX is transmitting in the second period which is odd numbered minutes in the JT65 protocol. DX4DX does not have to worry about selecting the proper period, as double right clicking and then double left clicking the call sign in CQ W6EME CM97 shown the main WSJT window will automatically select the proper Tx period, and generate the proper Tx message reply to W6EME's CQ. Given the 2.4 to 2.6 seconds for the signal to travel to the moon and back, each station has approximately 10 seconds to decode the received message and determine the proper Tx1-Tx6 *reply message to send. The station calling CQ does not send the RO or 73 messages. The station answering a CQ does not send RRR, but always sends RO and 73. Beginners may press F5 in the main WSJT window to display a reminder guide on what messages to send.*

The example contact in Figure 9 is an ideal one. In practice, several scenarios can result in the contact taking much longer than the theoretical 6 minute minimum. In reality DX4DX may have to call W6EME many times before he is heard or W6EME could have many callers and DX4DX would have to wait for his turn. Alternatively, polarization shift could cause one or both stations not to hear each other. Polarization shift mid way through the contact can cause an incomplete contact. It is likely satellite stations attempting to make EME contacts will have to exhibit patience when attempting to complete a contact.

The process of decoding messages requires analysis of signals in the SpecJT window, as shown in Figure 11. The x-axis, referred to as the DF axis, is where the audio passband from the radio is displayed in Hertz. The DF axis is offset 1270.5 Hz, which is at DF=0. In Figure 11, note the DF axis tic mark labeled A, which looks like a green upside down capital letter T. Its vertical section is centered at 460, which would be 1270.5+460=1730.5 Hz. Its horizontal section spans 25 Hz each direction from center. This 50 Hz span is where the JT65 decoder is looking for JT65 sync tones and denoted by Tol 50 in the main WSJT window, shown in Figure 8. This 50 Hz Tol is the bandwidth of a tight acoustic filter in which the JT65 decoder is limited to look for sync tones. The bandwidth of this filter can be adjusted from 10 Hz to 600 Hz by right or left clicking on the Tol box in the main WSJT window. W*hen the* Freeze *box in the main WSJT window is unchecked, the width of this green line becomes 1200 Hz. This is to be used when initially looking for JT65 signals. Once a sync line is detected, as shown at DF=460 in Figure 11, a Tol filter should be placed around it, reducing the bandwidth the JT65 decoder has to analyze to locate the sync tone. Double clicking on a sync line automatically places a 50 Hz Tol filter around it. Signals within a bandwidth of a Tol filter are automatically decoded 50 seconds after the minute. If more than one JT65 signal is present, and the 50 second mark has passed, double clicking on each sync line will cause the JT65 decoder to decode that signal. If two JT65 signals are very close to each other, a small Tol value should be used to ensure the JT65 decoder can only analyze one signal. If a JT65 signal is close to a carrier, a small Tol value should be used to filter out the carrier from being decoded.*

The JT65B signal shown in Figure 11 has caused the JT65 decoder to decode the signal displayed with a FileID *of 211600 in Figure 8, and shown in Figure 10.*

FileID	Sync	dB	DT	DF	W		Decoded Message	K-V flag	Deep Search confidence
211600	2	-22	2.6	460	2	#	AD6FP 3D2RS RH92 OOO	1	10

Figure 10. Decoded JT65 message

The FileID *of* 211600 *corresponds to the UTC time stamp of the period. The* Sync *value of 2 represents the relative level of synchronization achieved, which is above the -1 Sync threshold set in the mid section of the main WSJT window, thus allowing a decode. The* dB *value of -22 represents the average signal to noise ratio in reference to noise power in a 2.5 kHz bandwidth. Signal to noise ratios higher than -18 dB can usually be heard through the speaker. The* DT *value of 2.6 represents the number of seconds between the time the JT65 signal was transmitted and received. Bogus decodes often contain unrealistic DT values. The* DF *value of 460 represents where on the DF axis the Sync line is located, shown by label A in Figure 11. The* W *value of 2 represents the width of the sync line in Hertz. This can be used to identify receiver or transmitter drift, as well as bogus decodes. While not extremely useful, the # represents the decoded message contains an OOO report. An * in this field would indicate a standard message was decoded.* AD6FP 3D2RS RH92 OOO *is the decoded message. The K-V flag is* 1 *meaning the K-V decoder was successful. The Deep Search confidence rating of 10, discussed in section 3.6, means 3D2RS* RH92 *is in the Deep Search call3.txt database and the Deep Search decoder has rated the decode with its highest confidence, 10 on a 1-10 scale. Note, with a K-V flag of 1, a Deep Search decode is not necessary.*

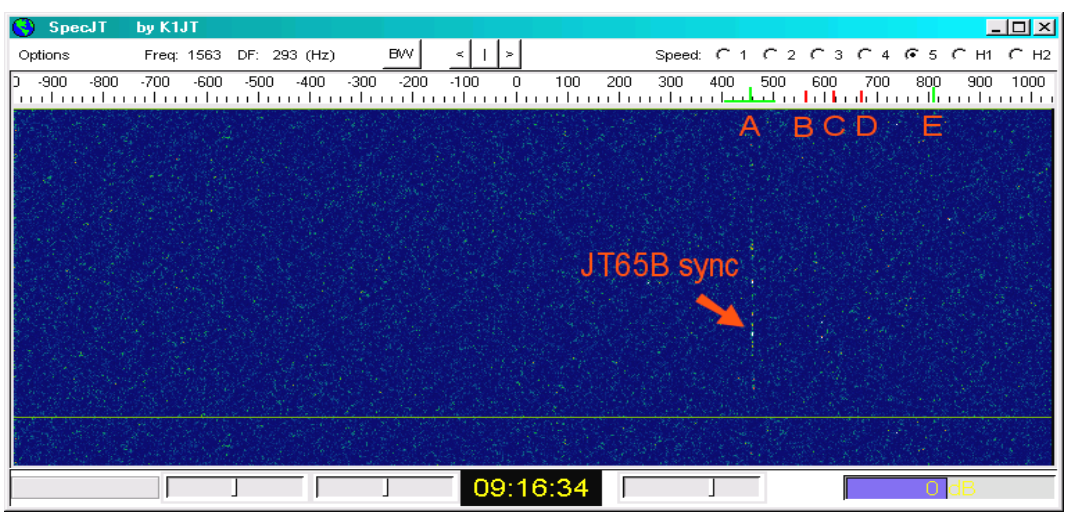

Figure 11. SpecJT Window

The red tic marks, labeled B, C and D in Figure 11 assist in identifying the short hand messages RO, RRR and 73 respectively. Short hand messages look like two parallel lines on the SpecJT waterfall, one line always being the sync line, labeled A. The span between the sync line and B, C or D label determines the content of the message. The red tic marks assist the operator in visually identifying a short hand message. As a result, software decoding of short hand messages is often not required. Short hand signals contain no synchronization information, thus their DT values are invalid.

3.6 Deep Search

Perhaps one of the most misunderstood aspects of the JT65 mode is its Deep Search[8] decoder. Normal Deep Search *should be enabled under the Decode→JT65 menu option in the main WSJT window. For non short hand messages, the JT65 protocol may utilize two decoders, a Koetter-Vardy Reed Solomon based decoder, and a Deep Search Decoder which is based on a database of known EME station call signs and grid squares. A K-V decode flag, denoted by label A in Figure 8, informs the user of a "0" if the K-V decode failed or "1" if successful. With a successful K-V decode flag, the user can be assured the received message matches the transmitted message. K-V decodes are possible down to signal to noise ratios of -26 dB in reference to a 2.5 kHz bandwidth, although not probable. The statistical probability of a -25 dB decode decreases sharply, down approximately 90% when compared to a -23 dB signal in reference to a 2.5 kHz bandwidth[20]. The Deep Search decoder references a call3.txt database file located in the WSJT install directory. The call3.txt database contains the call signs and grid squares of stations known to be active in making EME contacts. The Deep Search decoder generates and encodes expected JT65 messages based on the call3.txt data and your own call sign, then compares them to the received signal for a possible match. Enough bits to contain 2.1 call signs must be copied for the deep search algorithm to decode a transmitted message[8]. The Deep Search decoder result, denoted by label B in Figure 7, informs the user of a 1-10 confidence level of the decoded message, 10 being the highest confidence. Enabling* Aggressive Deep Search *under the* Decode → JT65 *menu allows decodes with confidence levels lower than 4 to be displayed. Decodes with such low confidence level ratings are naturally prone to a higher degree of error and often labeled with a question mark symbol. Such decodes need to be analyzed further by the operator and held to a higher standard to determine their validity. The JT65 protocol is a tool which may be utilized for making radio contact between two humans, not two machines. Operators must ask themselves several questions before determining if a decoded message is valid. Is the difference in time between each station's synchronization tones,* DT*, reasonable, around the 2.5 second range, accommodating for the signal's lunar path travel distance? Is the sync tone's signal width, W, reasonable? Is the grid square of the decoded station currently inside the moon's footprint? Is the decoded message expected and correct for the sequence? The operator must adequately answer these questions to boost his own confidence level that the displayed decoded message is valid.*

For a satellite station attempting to communicate via the EME path, the extra 4 dB of fairly reliable coding gain provided by the deep search decoder is paramount. To utilize this coding gain, both stations attempting to make contact should be listed in each other's call3.txt. To simplify this task globally, the Make more Miles on VHF[10] website provides an updated daily call3.txt for download. New EME operator may register and add themselves as an EME operator to the Make More Miles on VHF VHF-database. Frequently, JT65 EME operators download the latest Make More Miles on VHF call3.txt and use the WSJT Merge[15] utility to add new or updated entries into their own call3.txt. A typical satellite station can not afford to give up the 4 dB of coding gain lost by not properly utilizing the Deep Search decoder.

3.7 Locating EME Activity

Few stations start out with a software defined radio and MAP65/MAP65-IQ[21] software capable of simultaneously decoding all JT65 signals on an entire EME sub band at once. Beginners typically start out using WSJT and are limited to decoding signals in the 2 kHz-4 kHz bandwidth displayed on the SpecJT waterfall. On the 144 MHz amateur radio band most JT65B EME activity takes place from 144.100 MHz-144.160 MHz. On the 432 MHz band most JT65B EME activity takes place from 432.040 MHz-432.070 MHz. Looking for signals by manually monitoring 2 kHz-4 kHz of spectrum at a time for two minutes across an EME sub-band is time consuming. The Internet provides several resources to make this process more efficient. Real time frequency spots of stations calling CQ can be found on websites such as Live CQ on 144 MHz[17], and Make More Miles on VHF[10] websites. The Live CQ website is especially useful as it uses a reverse beacon network, displaying messages actually decoded by other EME stations. The HB9Q Logger[2] is popular for bands 432 MHz and above. It is worth noting EME activity on 144 MHz is greater than all other bands combined. When a station is said to be calling CQ at 144.134 MHz, it means the station calling CQ is transmitting at DF=0. Due to Doppler shift, and transmitter/receiver calibration error, it's likely the transmitted signal will be observed within a few hundred hertz of DF=0.

General EME news and updates on upcoming DXpeditions can be found on the 144 MHz EME Newsletter[11] or 432 and Above EME Newsletter[12]. Discussion on various EME topics can be had on the Moon-Net[22] email list.

4. References

[1] My 4el yagi EME story by OK1TEH
http://www.ok2kkw.com/00000104/eme.htm
[2] QRP EME by HB9Q
http://tinyurl.com/3ugldqe
[3] 4 element 2m EME contact by DJ7AL
http://tinyurl.com/3s7tsgc
[4] 2 element 2m EME contact by DJ7AL
http://tinyurl.com/3bdu2vy
[5] Tape Measure EME by G4DCV
http://www.g4dcv.co.uk/dfeme.htm
[6] WSJT Home Page
http://physics.princeton.edu/pulsar/K1JT/wsjt.html
[7] BktTimeSync by IZ2BKT
http://www.iz2bkt.com/BktTimeSync/BktTimeSyncEn.htm
[8] J. Taylor "How Many Bits are Copied in a JT65 Transmission?" (DUBUS, 3/2006)
Available: http://physics.princeton.edu/pulsar/K1JT/K1JT_eme2006_2.pdf
[9] J. Taylor "Earth-Moon-Earth (EME) Communication" (ARRL Handbook, 2010)
Available: http://physics.princeton.edu/pulsar/K1JT/Hbk_2010_Ch30_EME.pdf
[10]Make More Miles on VHF Moon Data and CQ spotter
http://www.mmmonvhf.de/eme.php
[11] 144 MHz EME Newsletter by DF2ZC
http://www.df2zc.de/newsletter
[12] 432 MHz and Above EME Newsletter by K2UYH et al.
http://www.nitehawk.com/rasmit/em70cm.html
[13] WSJT Decoding Tutorial Sample Files
http://physics.princeton.edu/pulsar/K1JT/WSJT6_Samples.EXE (Windows)
http://physics.princeton.edu/pulsar/K1JT/WSJT6_Samples.tgz (Linux)
[14] J. Taylor "EME with JT65" (QST, June 2005)
Available: http://physics.princeton.edu/pulsar/K1JT/WA50_June05.pdf
[15] WSJT Merge
http://www.k2txb.com/WsjtMerge.htm
[16] VE7BQH G/T chart
http://www.vhfdx.info/VE7BQH.html
[17]Live CQ on 144 MHz
http://www.livecq144.com
[18] Make More 432 MHz EME Contacts by Polarization Rotation
http://www.ifwtech.co.uk/g3sek/eme/pol1.htm
[19] Times Microwave LMR®-400 Data Sheet
http://www.timesmicrowave.com/products/lmr/downloads/22-25.pdf
[20] J. Taylor "The JT65 Communications Protocol" (QEX, September-October 2005)
Available: http://physics.princeton.edu/pulsar/K1JT/JT65.pdf
[21] J. Taylor "MAP65: A Panoramic, Polarization-Matching Receiver for JT65" (Microwave Update, October 2007)
http://physics.princeton.edu/pulsar/K1JT/MAP65.pdf
[22] Moon-Net e-mail list
http://mailman.pe1itr.com/mailman/listinfo/moon-net

Appendix

A. Noise Temperature Analysis at 144 MHz, 432 MHz and 1296 MHz

The benefits provided by LNAs on the 144 MHz, 432 MHz and 1296 MHz amateur bands can be shown with basic mathematical modeling and the reception improvements equated to what can be achieved with higher antenna gain. Noise in a receiver system can be modeled as temperature. The sky has different noise temperatures depending on frequency. Objects in the sky, such as the sun or Milky Way increase the sky noise temperature, thus the sky temperature, T_{sky}, is not constant. WSJT can display the current estimated sky temperature for a selected band under the View → Astronomical data *menu, as discussed in section 3.4.*

Good 144 MHz background sky noise level temperature can be 300 K or better. Noise temperature is related to noise figure, dBnf, by the equation Noise Temperature $= 290 \cdot (10^{(dBnf/10)} - 1)$ *(K). Assuming a 144 MHz LNA with a noise figure of 1.2 dB,* $290 \cdot (10^{(1.2/10)} - 1) = 92\,K + 300\ K\ sky\ noise = 392\ K$. *Consider if the LNA is upgraded to a unit with 0.2 dBnf.* $290 \cdot (10^{(0.2/10)} - 1) = 14\,K + 300\,K\ sky\ noise = 314\ K$, $10 \cdot \log(392K\ /\ 314K) = 0.96\,dB$ *improvement. This is comparable to the receive improvement by going from a yagi with 10m long boom to one with a 13m long boom.*

At 432 MHz the average sky temperature, T_{sky} is approximately 50 K. $290 \cdot (10^{(1.2/10)} - 1) = 92K$ *+ 50 K sky noise = 142 K. Consider the results if the LNA is upgraded to a unit with 0.2 dBnf.* $290 \cdot (10^{(0.2/10)} - 1) = 14K + 50K\ sky\ noise = 74K$, $10 \cdot \log(142K\ /\ 74K) = 2.8\ dB$ *. This 1 dB improvement in noise figure results in gains comparable to stacking a second yagi on receive.*

Finally lets assume going from a 1.2 dBnf to 0.2 dBnf LNA at 1296 MHz where sky temperature, Tsky=20 K. At 1.2 dBnf, 20 K+92 K = 112 K. At 0.2 dbnf, 20 K+14 K = 34 K, $10 \cdot \log(112K\ /\ 34K) = 5.17\,dB$ *improvement. At 1296 MHz, this 1 dB improvement in noise figure is analogous to going from a single yagi to a stack of four.*

B. Practicing JT65A on the HF bands

Beginners will find it helpful to master the JT65 contact procedure by first practicing on the HF bands. There are notable differences between JT65 contacts made on the HF bands versus EME. The sub-mode JT65A is used on all HF bands. It is convention to use the signal to noise ratio report as the exchange instead of O's as used in EME. This is achieved by only double right clicking on a decoded station's call sign. An example HF contact could look like:

CQ W6EME CM97
W6EME DX4DX PK23
DX4DX W6EME -17
W6EME DX4DX R-20
DX4DX W6EME RRR
W6EME DX4DX 73
DX4DX W6EME 73

Another key HF distinction is the usage of TxDF. *Unlike other popular digital modes in amateur radio, WSJT does not automatically line up the receive and transmit frequencies. After clicking on a sync tone in the SpecJT window, an operator must click on* TxDF *in the main WSJT window to transmit at the same frequency as the received signal. Make sure the Freeze DF (very bottom of the main WSJT window, show in Figure 8) and the highlighted red TxDF =XXX values are within ~10 Hz.*

*Distance traveled along the terrestrial path is small compared to the radio wave's speed, thus the DT value between two stations with properly synchronized clocks should be near 0, ±0.5 seconds. In the WSJT main window, select Decode>→*JT65 *and check* Quick Decode. *Remember to unchecked this setting for EME use, as it compensates the decoder for the 2.5 second lunar path delay.*

Popular frequencies to find HF JT65 activity include 3.576 MHz, 7.076 MHz and 14.076 MHz, all Upper Side Band, limiting output power to 5-25W maximum.

C. WSJT Tips and Suggestions

►*Subjective methods for PC clock synchronization such as visually or audibly syncing with WWV are ineffective at best. Use software techniques discussed in section 3.1.*

►*Operators that have mastered other digital modes popular in amateur radio will likely find an easier transition to the modes contained in WSJT.*

►*Use an up to date call3.txt file, such as one provided to registered users of Make More Miles on VHF*[10].

►*While transmitting, the message you are currently sending is displayed in far bottom right corner of the main WSJT window. To change messages while already transmitting, click the square Tx1-Tx6 buttons as shown in Figure 11. The corresponding round Tx1-Tx6 buttons may be used to queue up the next message you want to send.*

►*Windows Vista and Windows 7 users can avoid potential permissions issues by installing WSJT into a folder other than c:\Program Files\WSJT such as c:\ham\WSJT.*

►*The RTS or DTS pins on the selected serial port is triggered momentarily before audio transmission starts. While not a replacement for a proper sequencer, it's better than nothing for switching an amplifier or pre-amp/LNA.*

►*Upper Side Band is the adopted convention for all digital modes on amateur bands, regardless of frequency.*

►*Use weak signals, -23 dB or less, to adjust the bottom left Brightness and Contrast sliders to best reveal signals in the SpecJT window. It is better to error on having extra noise speckle on the display than not enough.*

►*Frequency drift degrades the receiving station's ability to decode a signal. Temperature compensated crystal oscillators are highly recommended for the 2m band. They're essentially mandatory for 70cm and above.*

►*Adding your 6 digit grid to the Options menu will not alter any radio messages sent, but will improve accuracy for the azimuth, elevation, distance, and Astronomical Data calculations.*

►*Only standard Tx1-Tx6 messages should be used. A message that does not start with two call sign, or CQ / QRZ and a callsign is treated as random text and less likely to decode. Deep Search does not work for random text.*

►*If you have low horizon noise and a clear view of the horizon, up to 6 dB of ground gain can be obtained during the initial several degrees of moon rise and moon set.*

►*Enabling* Aggressive Deep Search *under the* Decode → JT65 *menu simply allows decodes with confidence levels lower than 4 to be displayed, as discussed in section 3.6.*

►*If a station fails to decode, you can (should) attempt to decode again by enabling/disabling AGC, then clicking Decode.*

►*If a station fails to decode, you can (should) attempt to decode again by reducing the Tol value then clicking Decode.*

► *When practicing making JT65 contacts on HF and the SNR is in the lower -20's or weaker, random text should not be used, as it significantly reduces likelihood of a decode and is considered poor operating practice. If you receive a -24 report, chances are slim the other station will decode a "TU 5W 73" message. A short hand 73 should be used in this circumstance. Poor JT65 operating is prevalent on HF.*

►*To avoid interference when making contacts on HF, space (TxDF) your signal 200 Hz away from all other sync tones after observing the spectrum for two minutes/periods.*

►*During the ARRL EME contest many large stations capable of contacting small stations will be active. Call CQ often. Contest participants can not use the internet, and thus competitive stations utilize a software defined radio receiver and MAP65/MAP65-IQ*[21] *software to analyze and decode the entire EME sub band at once. Call CQ and these stations will find you.*

►*There is a JT65 averaging feature which when properly used can net another 2 dB-3 dB of gain when applied over a sufficient number of periods.*

►*When a station is using a supported prefix, as defined under* Help→ Available suffixes and add-on prefixes*, no grid squares will be sent, and only the transmitting station's call sign will be included in reports.*

►*Short hand messages do not contain synchronization information, thus their DT value is invalid.*

►*Noise sources in the house can be determined by cutting power to the house and running the receiver and laptop off battery power. Individual circuit branches can be turned back on, while monitoring the SpecJT noise floor dB meter.*

►*If there is another station locally whom is also operating JT65, attempt to coordinate so you're both transmitting on the same period to avoid potential interference.*

►*A program called WS2ADIF may be used to convert the WSJT.log file into the popular ADIF format.*

►*In the main WSJT window, checking* Decode→JT65→No Shorthands if Tx 1 *will disable short hand decodes if the Tx1 message is selected, as clearly a short hand reply to a Tx1 message is not correct. This feature can also be used to disable false short hand decodes caused by birdies. When such a false decode due to a birdie is seen, Select Tx1 and decode the message again, being sure to select the proper Tx message before the start of the next period.*

►*To check whether a call sign is contained in your call3.txt database, type in the call in the* To Radio *field in the WSJT main window and click* Lookup*. If no grid shows up, the call is not listed in your call3.txt.*

►*A 1 10 after a decode as shown at* FileID *211600 in Figure 8 means the station was successfully decoded without the Deep Search decoder and the decoded station is included in your call3.txt database. A 1 0 decode as shown in* FileID *010600 means the Deep Search decoder was not used due to the decoded station not being listed in your call3.txt database or To Radio field or Deep Search has been disabled in the Decode options menu. It's advisable to add any stations you decode which are not listed in your call3.txt file by filling out the* To Radio *and* Grid *fields, then clicking* Add.

A Satellite-Portable Backpacking Trip to Rare California Grid Square CM79

David Palmer, KB5WIA
4069 Shaker Run Circle
Fairfield, CA 94533

In August 2011, Dave KB5WIA traveled to Chemise Mountain in the remote Northern California Lost Coast. A complete portable satellite station, including remote antenna configuration, was backpacked over the mountain to the junction of rare grid square CM79 and adjoining grids CM89, CN70, and CN80. One significant challenge was compliance with VUCC rules regarding operating on grid intersections, while simultaneously reaching satellites blocked by a steep eastern ridgeline. Other challenges included receiving UHF downlink signals through a thick forest canopy, working the moving satellites with a fixed antenna, and overcoming coax loss with the remote antenna. Ultimately a number of satellite contacts were possible using AO-7, VO-52, FO-29, AO-51, AO-27, and SO-50 over two days of the expedition.

Background

Of the 488 Maidenhead Grid Squares in the continental USA, some are very remote, inaccessible, or far away from population centers. These rare grid squares provide opportunities for mini radio DX-Peditions; one of the rarest grid squares for ham radio operators is CM79.

CM79 is on the coast of Northern California. The grid square is almost entirely ocean, with just a small portion (less than a square mile) at the northeast corner extending into land. The land that CM79 brushes against contains no roads; no power; not even any trails run through CM79. It is surrounded by the primitive wilderness of the King Range National Conservation Area, and is only accessible by a 2.5-mile hike up and over Chemise Mountain.

In 2010, Russ KB8U backpacked 6-meter radio equipment to CM79 to activate this grid for hams chasing the Fred Fish Memorial Award (all 488 USA grids worked on VHF). When I read Russ's story in QST Magazine, I was inspired to try something similar. Ham radio satellite operators also collect grid squares, and CM79 is exceptionally rare in the satellite community as well. How difficult could it be to activate CM79 for the amateur satellite community?

Difficult Terrain and Multiple Grids

The terrain of CM79 is quite inhospitable to VHF and UHF radio communication. The entire land portion of the grid square lies on the steeply sloping *west* side of Chemise Mountain. This means that any radio communication to the east (the rest of the country) necessarily means finding a way to get the signal over the top of the mountain. Fortunately, the actual northeast tip of CM79 is only 70' downhill from the ridgeline. Russ solved this problem in 2010 by using a remote operating location, and remote antenna, to keep his transmitter exactly over CM79 while having the antenna with a view to the east.

By having his transmitter on the CM79 corner (northeast tip), it was actually also in three other adjacent grid squares (CM89 to the east, CN70 the north, and CN80 to the northeast). The ARRL VHF rules provide for this type of operation as long as some portion of the entire station (power supply, transmitter, antenna) occupies all four grids.

Planning - and Plans Change

Reading through the ARRL VHF Contest rules, it seemed simple enough. I'd need to carry my normal portable satellite radio equipment up to the location of the grid intersection, and start operating.

Since satellites are moving targets, and I've always worked satellites by tracking them with the antenna, I figured there was no way to activate CM79 without also being on the ridgetop (70' uphill from the grid corner) so that I could steer the antenna and track the satellite as it went by. My plan was therefore to have the station power supply directly at the CM79/89/CN70/80 grid corner, and my transmitter and antenna up on the ridge so that I could follow the sats.

Everything seemed fine until an email from the ARRL HQ arrived: they had been discussing my plans and felt that having just the power supply at the grid corner wasn't sufficient to claim that the station was in four grids simultaneously. The transmitter itself has to be at the intersection. This certainly made me rethink my plans!! Since satellite operation requires constant tuning of the radios, that meant my operating position as well had to be down the hillside in order to be directly over grid corner. And that also meant having to use a remote antenna system like Russ did, except at mid-VHF and UHF frequencies where line losses are significantly greater. Even more importantly, being 70' down a brushy hillside from my antenna would mean that I would no longer be able to steer the antenna towards the satellites as they went by!!

More Planning - Possible Solutions?

The first realization that I had was that if the satellites are going overhead, or are heading out over the ocean to the west, then I don't actually need a remote antenna setup. I can use the satellite elevation itself to do the "work" of lifting my signal over the ridgetop! I figured about 2/3rds of the passes would be overhead or to the west, where I wouldn't have to use a remote antenna at all. That just leaves the remaining 1/3 of passes to the east: how to allow the east coast stations to work me through the remote setup.

My second realization was that even though I'd be losing almost 50% of my signal power at UHF frequencies with a remote antenna, I could maybe overcome this. I could use very low-loss coax. I could use a preamplifier at the antenna (to boost the feeble UHF downlink signal coming from the satellite before it entered the cable), and a higher-powered transmitter (to put more UHF power into the cable on the uplink to begin with). Maybe I'd still have enough signal to work the eastern stations?

My third realization was that I didn't really have to continuously track the satellites as they went by. I could point the antenna at a fixed point in the sky, and let the satellite pass into view and out again. Then I could run back

up the hill and re-aim the antenna. I hadn't seen the terrain but was guessing I could do this maybe two or three times during a 15-minute satellite pass.

I described my revised plans in detail to ARRL HQ: I'd have my entire station directly over the grid square boundary for all passes except those to the east, and for eastern passes I'd use the remote antenna on the ridge. At no point would my transmitters or person leave the grid intersection while operating. ARRL HQ advised that this was acceptable. Yay!!!!

Preparation

Unfortunately, the split / remote station setup added significantly to the amount of stuff to haul up and over the mountain! Notably, 100' of coaxial cable. A high-powered transmitter (the Yaesu FT-857D from my truck). A second 12V battery to power the transmitter (5 pounds of lead and acid). The preamplifier with associated connectors. Another battery box to power the preamp. A second tripod to support the remote antenna. Whew!!!

Added to the list above are my regular satellite-portable station items: two Yaesu FT-817ND radios, the Elk antenna, a tripod to hang them all on, a netbook computer to do the tracking and run the radios, a LiFePO4 battery pack, and 60 watts worth of solar panels. Total system weight was probably around 50 pounds or so, I'm not entirely sure, but it was heavy! I figured I could pack the stuff up the mountain in two separate trips -- one Saturday night after arrival, and one Monday morning.

I tested everything out in the few days prior to the trip, and found that the remote antenna system actually worked. Signals weren't great, but were acceptable for communication. Ready to go!

The Trip - Day 0

After a six-hour drive up the California coast, I arrived at the Wailiki Campground and set up camp. Wailiki campground is dark and feels very remote -- it's in a narrow canyon, and there was only one other camper in the entire campground. The camp was infested by hordes of mosquitoes! By 5:30pm I had the backpack loaded with the first set of gear (primarily cables, solar panels, batteries, tripods, anything heavy) and was on the trail. Weather was clear and sunny.

The trail up Chemise Mountain is fairly rugged, especially while packing gear. It's part of the Lost Coast Trail, and begins with a 600-foot climb up the northeast slope of the mountain, through tall redwood forest. The trail then turns south and skirts the eastern of the ridge, then follows the narrow ridge up and down and eventually after a long descent comes to the second intersection of Chincquapin Loop trail. This point is maybe a hundred and some feet northeast of the CM79 grid corner, and is marked with a wooden signpost. (I’d be spending a lot of time sitting and leaning against that signpost in the next two days, waiting for satellites to come by -- it was a nice open and flat spot!) The hike up the trail went well. It was 2.5 miles from the campground; it took about an hour and a half to get up there.

My first impressions of the CM79 grid corner were "uh-oh". Rather than being open, the entire area was in a light forest. Enough sunlight trickled through the trees to dapple the ground below, but at UHF frequencies those same trees

could significantly block the signals getting out. I worried that would further reduce my already weak signal.

Finding the exact grid intersection by GPS was fairly straightforward -- I used a Garmin Vista HCx (high sensitivity) and it routinely had error figures less than 20 feet even under the tree cover. It also helped that I had seen pictures of the area on the Confluence.Org site, where others had located the -124 West / 40 North boundary just for fun. After finding the grid intersection, that's when I got my first good look at the hill to the east -- 70 feet of steep slope, covered in slippery leaves, manzanita, and poison oak. I then realized my idea of running up and down to re-aim the remote antenna on eastern passes wasn't going to work -- I'd have to pick a spot and leave it there.

I dropped off the load of equipment, ran out the hundred foot cable connecting the operating location to the tripod on the ridge, and headed back to camp. Traveling lighter without the equipment, I made it back to camp in just over an hour. There was enough daylight to feed myself and a few hundred mosquitoes, and get some rest.

The Trip - Day 1

Day 1 of operating satellites was Sunday August 7th. I was up early packing all the remaining equipment, as well as enough food, water, clothing, and emergency supplies to last the whole day up on the mountain. I also packed a book -- sitting in the woods waiting for satellites to come by is somewhat akin to sitting in an airport waiting for a flight, lots of time to kill!!

At first light I was on the trail to make it up to the CM79 area and get things set up for the first satellite pass. I carried my SPOT Messenger GPS with me -- it relayed my coordinates to a web page, so anyone interested could see where I was on the trip.

Once I arrived at the CM79 area, I left the SPOT on the signpost near the trail intersection (since the SPOT was also a possible lifeline in this remote area, I wanted it to have as much of a view of the sky as I could, in case I had to send out an SOS message with it). I then carried the rest of the equipment to my operating location centered on the grid boundary down the hill, connected up the cables, put up the remote antenna directly on the trail ridgetop, and waited for AO-07 to come by. I was using the FT-857D radio for as much uplink power as possible. The remote antenna was aimed into the forest to the east.

Satellite AO-07 came by, and wow signals were faint! I could barely hear my own CW downlink. Finally I was able to make contact with Drew KO4MA in Florida. I heard AA5PK on but couldn't make a two-way contact. After the pass, I thought "how on earth am I going to do this -- Oscar 7 is normally not too much of a problem, and here in this forest I can barely hear it!".

The next satellite to come by was Oscar 51. I had moved my Elk antenna to the operating location on the grid intersection. AO-51 came ... and went ... and I didn't hear **anything**! Oscar 51 is normally the loudest of the sats, and here I was in a forest, feeding mosquitoes, and even with the antenna directly at the radios and steerable, and a western pass out over the ocean with no ridge in the way .... I couldn't hear it!! At that point I had serious thoughts about whether this expedition was even going to be possible.

The third satellite pass was Oscar 7 making another trip around, this time to the west, out over the ocean. I had the Elk antenna still at the operating location on the grid boundary, so there was no need for a remote this time. I held my breath, hoping that being able to steer the antenna this time (and not using the remote antenna) would help. I also ditched the FT-857D with it's 20W output in favor of my normal FT-817ND 5W radio for the UHF uplink -- the reason was that I hadn't configured the '857 for computer control, and I really wanted the computer to do the work of tuning the radio for Doppler correction, so I could focus on pointing the antenna. It worked! I was able to make contacts with 3 stations on that pass!! Okay, so maybe there is hope.

Satellite VO-52 then came over at a 70 degree elevation to the east. Since the hill to my east only sloped up at 30 degrees or so, the sat was well above the hilltop so I could use my normal setup -- and I made three nice contacts. Whew! Finally I was getting somewhere. The little Yaesu FT-817ND radios were doing their job!

The next pass was VO-52 as it came around the earth again, this time way out west over the ocean. I again used normal configuration with the antenna right on the tripod at my operating station on the grid corners. I had great downlink signals this time (clearly the 2m downlink of VO-52 was much less attenuated by the foliage than the 70cm downlink of AO-51). I called CQ -- heard myself calling CQ ... and didn't hear anyone else on! Oh well. At this point, I recorded in my notes "Mosquitoes BAD" and I noticed I underlined the word "bad" twice.

Oscar 27 then came by in a low (9 degree elevation) easterly pass. Time to use the remote antenna setup again -- this time with the Advanced Receiver Research SP432VDG GAsFET preamp. I could hear the satellite but just barely -- it should have been strong and clear with that preamp. Obviously the forest was causing a major problem with the UHF downlink.

One thing I noticed (there's a lot of time to reflect when you're sitting on a remote mountain feeding mosquitoes) was that signals seemed to come and go as the satellite passed through openings in the forest. I then looked at my remote antenna setup (where the tripod was for that first Oscar 7 pass) and realized I had it aimed through many thick trees. Since I brought 100' of LMR-400 cable, and about 75' of it was being used to get the signal up to the top of the hill, I realized that I could use the remaining 25' to put the remote antenna slightly further EAST on the hilltop, into an area that was "less thick" with trees. Not exactly a clearing, but fewer trees to block the signal.

Oscar 27 then came by again, this time much higher to the east. Time to try out the above theory, that my little "clearing" would help the remote antenna and preamp see the satellite. I picked the center of the clearest spot I could and aimed the antenna there, polarized at about 45 degrees ... figuring that even though I can't aim the antenna during the pass, at some point the satellite will have to cross though that window. It worked!!! I made a number of contacts.

Satellite FO-29 came by about an hour later, also to the east. Again I put the remote-antenna-with-preamp-in-clearing idea to the test. Again more contacts! This time I managed to work K8YSE who had missed me the last time I was in CM89 -- now, however, I was at the grid intersection (still trying not to slide down the hill and giving the mosquitoes brunch) so I could give him CM89 plus CM79, CN80 and CN90. Yay!

A low eastern pass of Oscar 51 came by in the early afternoon, and I again used the remote-blindly-aimed-antenna-in-a-clearing-with-preamp configuration. Success again! 7 nice contacts.

I was left wondering how the heck a blindly aimed antenna at the end of 100-foot run of coax worked better than my nearly deaf pass of the same satellite earlier that morning. Again, more time to think when just sitting there and waiting. That's when I realized that I didn't have the preamp on in the morning (westerly) pass. I never use a preamp in my normal portable configuration (Elk antenna on tripod on top of radios), never have needed to. I thought to myself, maybe I should use the preamp in the normal configuration to help overcome the losses on the UHF downlink from the forest. It seems to be working when the antenna is located 100' away, it should help when the antenna is right on my operating location. Oscar 27 came by on a low pass to the west, and this time I had the preamp installed on the Elk in the normal configuration. It worked! Several more nice contacts! Before I left on the trip, I had thought the preamp was needed solely to overcome the losses from my necessary 100-foot run of cable ... but now I had realized it was essential to overcome the losses from the forest cover (the GAsFET preamp is much more sensitive than my FT-817ND front end, something I had never noticed before).

SO-50 then came by on an easterly pass -- so I used the remote antenna again. I heard many stations but it was so congested I could only make a few contacts. The system was working, however, so that was good -- blindly aiming the antenna and waiting for the satellite to cross into its view was indeed a way to make contacts.

At some point during the afternoon I recharged the LiFePO4 battery pack with the solar panels in a nice patch of sunlight up the trail to the north. The PowerFilm solar panels worked great, and within an hour had fully recharged the pack. My battery packs are exclusively charged by solar, so incidentally this radio expedition was 100% solar powered!

The last pass of the day was another Oscar 51 pass -- almost overhead. I was able to make quite a few contacts on this one, using the normal configuration with the addition of the pre-amp. The preamp made steering the antenna a bit more difficult (more weight) but it certainly was working.

It was now about 5pm -- I knew I had to get off the mountain and back to camp. I packed up all the non-essential equipment I could (extra solar panels; the unused FT-857D radio; the lead acid battery, etc) and made it back down with enough daylight to cook dinner. Yay!

The Trip - Day 2

The second day on the mountain progressed similarly to the first -- without as much of the learning curve! I now had the station configurations worked out, for both the normal and remote setups.

Although it was difficult to operate down the hill in the bush with the mosquitoes, it was important to stick to the exact same plan that was approved by ARRL for the full station was centered on the grid boundary. At one point I walked in a big circle around my station and took photos of it, while standing in each of the four different grid squares; it was fun to see the grids CM79, CM89, CN70, and CN80 all show up on the GPS when I was only a few feet away from the station in the four different directions. As per ARRL requirements, I also

took video to show the uncut footage of the GPS at -124.00000 +40.00000, zooming out and then showing the station, and even took the video up to the top of the hill to show the remote antenna.

Monday's satellite passes started with Oscar 7 in mode A (my 10-meter mode A antenna was a 40-sloping wire tuned with an Elecraft T1 tuner) ... didn't work well, but I made one contact. Following that was a VO-52 pass to the east with the remote configuration. After that, another AO-7 mode A pass where I couldn't hear anything on my tuned longwire. Then another VO-52 pass with great downlinks, up to S8 (and that's without a preamp, for U/V sats I disconnect the preamp to reduce uplink loss) ... I called CQ but no one else was on the satellite! I then took a "quick" break to carry some more stuff off the mountain -- a simple 5-mile two-and-a-half-hour round trip. Once I got back, an easterly Oscar 27 pass with the remote setup yielded a number of nice contacts. After that one, a very low (5 degree) Oscar 51 pass didn't yield any. 5 degrees above the horizon was just too thick with forest for the remote to work. Next pass was Oscar 27 to the west, with a number of nice contacts again, and then FO-29 to the east with the remote configuration. I was kept busy hauling the Elk antenna up and down the hill!! Finally I had a high easterly Oscar 51 pass which yielded a number of nice contacts again, woohoo!

At that point, 4:30pm, it was again time to pack up and head off the mountain. I rounded up all of my components: spooled up the remote cable, boxed up the equipment, folded up the two tripods and the Elk, and packed everything into the backpack. Last thing I did was clear the entire area I was and restore it to pretty much the way I found it.

Hiking back down the mountain took about an hour and a half. Interestingly, the fog had cleared out on the ocean, so there were some great views of the coastline through a few gaps in the trees. When I got back to camp, the mosquitoes were thick! I had other plans, though -- so I packed up the tent and camping equipment (giving the mosquitoes one last dinner) and headed off to Shelter Cove for a nice motel with an ocean-view room. It was a nice way to finish the expedition!

Overall, the trip was a lot of fun, and a lot more challenging than I had originally pictured. I made four trips up and down the mountain hauling equipment, covering roughly 20+ miles and over 5,000 feet of elevation gain. The outcome netted about 23s satellites worked, with quite a few QSOs as a result. Best of all, it was a great way to experience this remote part of California wilderness!

Work Satellites with your HT!

Most hams already have the necessary equipment to work FM amateur satellites.
This guide offers all the information you need to "work the birds."

All cited resources are available to you on on Web site:

http://www.work-sat.com

If you have 2M and 440 capabilities (either "split frequencies" in one HT, or two radios), you can work FM amateur satellites! For example, satellite AO-51's current **VHF/UHF (V/U)** mode, the **UPLINK** frequency (**to** AO-51) for FM voice is 145.880MHz*. The **DOWNLINK** freq (**from** AO-51) is 435.150MHz*.

First, you need to know **WHEN** and **WHERE** the satellite will be passing over your location. There are several commercial computer programs[1] that will tell you. In the home office, I use **MacDoppler**. Outside, though, I use **PocketSat** on my Palm PDA or iPod touch/iPhone. On my netbook, **Nova for Windows** is amazing. But **free of charge** info is also available online at …

amsat.org - or - **heavens-above.com**

Plug in your longitude and latitude coordinates on either or both of these sites, and you can access amateur satellite pass information.

The one "absolute" for success is to **open up your squelch**. We're talking "weak signals" from 500+ miles away - so don't expect the satellite to be strong enough to break squelch like your local repeater. Sure, it's a little noisy, but that's part of the process. That noise is an aid in locating the satellite: When the frequency starts exhibit **quieting**, that's a sign that you are **capturing** the satellite's signal!

Improve your HT's stock antenna (most are rated at **NEGATIVE** 2-3 db!). For BNC connectors, **Pryme**'s AL-800[2] will make the difference. For SMA, the **Diamond** SRH-320a or **Smiley** 270A are good performers. Using an **Arrow** dual-band[3] Yagi is better. If you prefer to homebrew your antenna[4], go to the work-sat.com Web site's ANTENNAS page for construction article links.

Set up your radio to tune for the **Doppler effect** on the downlink. Start listening **above** the center frequency[5] - you will **acquire** the satellite sooner and clearer. When the downlink gets scratchy or fuzzy, tune down 5KHz at a time, and reception should be clearer. Only transmit when you can **clearly** hear the satellite. Follow the signal down in frequency as the pass continues.

Don't hold your whip antenna upright. Held in a vertical position, your transmitted signal is hitting land-based receivers. You need to tilt your HT's antenna so that it is **perpendicular** to the airborne satellite. Very few of the ham satellites are land-based (grin), so you must **TILT** your antenna about the same amount as the satellite's **ELEVATION**. You'll quickly get the hang of it - and hear the difference!

Ideally, we should all be working the satellites in **full duplex** mode, where we can simultaneously listen to the downlink as we are transmitting. Although this method is preferred, it is not mandatory: Carefully monitor the downlink, and wait for a break in the conversations to announce yourself. You might find it helpful to record your sessions for later review. Even if you don't make a contact during a pass, a recording can help you recognize the callsigns and voices of other operators. Pocket recorders or smartphone apps are great for this. If working full-duplex, use an earpiece or headphones to monitor the downlink.

Knowing your grid square - and having a grid square map - is a quick way of identifying locations of what you will be hearing. The **ARRL** and **Icom** have grid square maps: Icom's is free and available at better ham radio stores[6].

It just takes a little preparation and planning for working amateur satellites. Not every pass is workable with an HT — don't go after the sub-10° elevation passes as you start "working the birds." Choose your passes wisely: Working higher elevation passes will give you better results.

When you clearly hear others, listen for a break in the action, and use the ITU-approved phonetics[7] to announce your callsign, grid square, and op mode:

"**KILO-SIX-LIMA-CHARLIE-SIERRA, DELTA-MIKE - ONE-THREE, handheld**."

Check work-sat.com for the satellites' home Web pages – to make sure the sat is in the mode you can work with your setup!

Ask questions! Find an elmer in your club for support, or use the Work-Sat.com YahooGroup for any questions. And join AMSAT-NA![8]

Clint Bradford, K6LCS
AMSAT area coordinator
NASA / ARISS school technical support
www.work-sat.com
clint@clintbradford.com

Skype, Twitter: clintbradford

Updated 09/14/2011

Notes

Access this Web site for all citations, links, resources, and updates:

http://www.work-sat.com

[1] Links to Nova for Windows, PocketSat, MacDoppler, SatPC32, HamSat DROID, SATme, GoSatWatch – and more – available on the Tracking page at work-sat.com**.**

[2] The Pryme AL-800 telescopes to 34" and collapses to 10". It is packaged with a 9" rat tail - which you can use for everyday use. Use caution with this massive, heavy antenna: It has the potential of placing a lot of stress on your radio's BNC connector.

[3] Arrow's Model 146/437-10WBP is a dual-band cross-Yagi design, with a diplexer built into the handle, with 3 elements on 2M and 7 on 440. See it in action in the December, 2007 issue of CQ Magazine. Links to Arrow – and others – are on the Antennas page at work-sat.com.

[4] Alex Diaz' Yagi-Uda plans, AMSAT's "Cheap and Easy" sat antenna articles, a tape measure beam construction article – and LOTS more – are all on the Antennas page at work-sat.com

[5] For example, here's how I have programmed my radios for **AO-51***:

Ch #	Name	TX Freq*	CTCSS*	RX Freq	CTCSS
101	51 +2	145.880*	67.0*	435.160	None
102	51 +1	145.880*	67.0*	435.155	None
103	**51 MID**	**145.880***	67.0*	**435.150**	**None**
104	51 -1	145.880*	67.0*	435.145	None
105	51 -2	145.880*	67.0*	435.140	None

And here's how I have programmed my radios for **SO-50**:

Ch #	Name	TX Freq	CTCSS	RX Freq	CTCSS
201	50 +4	145.850	67.0	436.815	None
202	50 +3	145.850	67.0	436.810	None
203	50 +2	145.850	67.0	436.805	None
204	50 +1	145.850	67.0	436.800	None
205	50 74	145.850	74.4	436.795	None
206	**50 MID**	**145.850**	**67.0**	**436.795**	**None**
207	50 -1	145.850	67.0	436.790	None
208	50 -2	145.850	67.0	436.785	None
209	50 -3	145.850	67.0	436.780	None

[6] A .pdf copy of Icom's grid square map is available on the Shack Aids page at work-sat.com.

[7] Download the ARRL's Handy Ops Guide (FSD-220) at – you guessed it – work-sat.com.

[8] **AMSAT** deserves your support! Membership isn't that expensive, and members are entitled to discounts on AMSAT publications and satellite tracking software. Support the sats!

[*] Consult the sats' control team pages for frequency changes and scheduled updates. What's your single source for links to the ops schedules for the popular FM birds? **work-sat.com** !

I've been a licensed amateur just since 1994, and involved with AMSAT the past few years. My "***Working Amateur Satellites with your HT***" presentation has proven to be popular, and has been given to scores of clubs and hamfests in Southern California ... as well as via EchoLink and Skype conferences. *Some comments received …*

Clint has this magnetism - you never know what to expect. He started out with interesting trivia and gave prizes to the lucky winners. He is a very motivating speaker!

Your Web site took me from zero knowledge to getting an HT and an Arrow. And just four months later, I have qualified for VUCC on the FM birds. A great site for the beginner on the birds. You un-mystify them.

I love the site and I greatly appreciate the information you have provided to get me going! Yours is a no-nonsense approach to working satellites and helpful documentation (tutorial). The photos really helped in understanding.

Simplicity ... the idea of working sats "sounds complicated" but that's really not the case. You keep the language simple, illustrations simple, and concept simple … give folks the idea that any ham can do this (which they can) with the right equipment....if they follow the directions you provide.

Want a lively, hour-long satellite presentation at YOUR club?

I have given my presentation several times via Skype: I prepare and send a customized slideshow ahead of time for you to project to your club, and we use Skype over the Internet for two-way audio.

Contact me – let's schedule a presentation!

Clint Bradford, K6LCS
Mira Loma CA US DM13
Email: **clint@clintbradford.com**
909-241-7666

The Importance of Educational Outreach for AMSAT

Barry Baines, WD4ASW
President-AMSAT

For the first 40 years of AMSAT's existence, launch opportunities as well as spacecraft development have focused on amateur radio-based considerations as well as finding 'cheap' launches. However, the success of the microsat and cubesat-sized spacecraft for commercial and military applications has increased the demand for small satellite launches, thus pricing AMSAT out of the market. This paper discusses AMSAT's mission/vision regarding educational outreach as well as recent events that reflect the challenges that AMSAT has experienced in working in this new arena which may translate into new launch opportunities based upon 'educational outreach' as defined by the launch provider as the justification for placing amateur radio assets in orbit. This in turn places demands on AMSAT to develop the skillsets necessary to provide educational content as part of the 'package' to justify support for placing AMSAT-built satellites into orbit. AMSAT's difficulties in developing 'educational content' to complement development of ARISSat-1/Kedr are indicative of the need for AMSAT to develop these skillsets.

Background

AMSAT was incorporated in March1969. Two key definitions of the purpose of AMSAT are defined in the Corporation's Bylaws:

> A. Developing and providing satellite and related equipment and technology used or useful for amateur radio communication and to conduct experiments by suitably equipped amateur radio stations throughout the world on a non-discriminatory basis.
>
> B. Encouraging development of skills and the advancement of specialized knowledge in the art and practice of amateur radio communications and space science.[i]

In 2004, the AMSAT BOD released a Strategic Plan, which included the following Mission Statement for AMSAT:

> "AMSAT is a non-profit volunteer organization which designs, builds and operates experimental satellites and promotes space education. We work in partnership with government, industry, educational institutions and fellow amateur radio societies. We encourage technical and scientific, innovation and promote the training and development of skilled satellite and ground system designers and operators.[ii]

Two key components of this Mission Statement are:

a. Working in partnerships with various organizations, and

b. Promoting space education

Since promulgation of this Mission Statement, AMSAT has sought to fulfill its expectations. While the statement about working with 'educational institutions' was not specifically defined, the BOD was well aware of evolving trends concerning cubesats. AMSAT was also heavily involved with ARISS (Amateur Radio on the International Space Station) and expected that relationship would continue with its focus on school contacts with the ISS. At this point of time (2004), once Project Echo (AO-51) was launched later in 2004, it was presumed that low earth orbit (LEO) satellites would be fostered by university programs (such as student cubesats) while AMSAT focused on High Earth Orbit (HEO) satellites such as Eagle and AMSAT-DL's Phase 3-E project (which had AMSAT's support).

Over the next four years a number of changes took place that altered the environment concerning this expectation. By 2008, it was clear that AMSAT Eagle would not be able to be flown due to the high cost of launching a satellite of that size into high earth orbit. We could not find an opportunity for a "low cost" launch. Meanwhile, AMSAT-DL was also finding it impossible to identify a launch opportunity for their Phase 3-E satellite (which is based upon a space frame that was flown as AO-10 and AO-13). Clearly, the days of 'cheap' launches were gone as there were no 'test launches' available (Ariane 5 was now operational) and other organizations were also building 'smaller' satellites that they were willing to pay real $$$ to be placed in orbit.

AMSAT also evaluated the feasibility of placing a rideshare payload (e.g. incorporating Eagle's communications equipment only) onto a geosynchronous satellite, but it soon became clear that the satellite's owner was expecting very significant sums of money that would equal roughly the amount of money expected to cover a HEO satellite launch. Given the challenges or raising funds for AO-40 (Phase 3-D), a multi-million dollar capital campaign for a rideshare that would only cover 1/3 of the Earth's surface (thus not providing services to Europe or Asia) was out-of-reach and further, the anticipated project deadlines would be very difficult to achieve. We were also aware that other entities were also interested in the same rideshare opportunity, so the prospects for AMSAT competing against well-financed and organized competitors for 'space' on this platform were pretty small.

One other path that AMSAT had established was to formalize an education position within the AMSAT leadership. In late 1998, the Director-Education position was initially established with the goal of creating an AMSAT-Education relationship at various levels (University, High School, Middle School) to encourage space education. Several individuals subsequently held this position, but AMSAT found that it was difficult to find leaders willing to do the 'grunt work' necessary to establish priorities, build an education team, create suitable materials, and establish relationships. Despite the efforts of the AMSAT Board of Directors in 2004 to establish a higher priority on education outreach, the position was subsequently dropped in June 2008 due to lack of a qualified volunteer to fill the position with relatively little progress made to date. Clearly, AMSAT was challenged in translating a desire to enhance space education into a tangible process that met expectations.

Flying "Mr. Smith"

Meanwhile, independent of the Eagle Project and AMSAT's primary focus on a HEO satellite project, AMSAT was also involved with the SuitSat-1 project. Originally proposed by Sergei Samburov, RV3DR to the ARISS-I (International) community and supported by RSC-Energia, AMSAT agreed to build the components necessary to install in a surplus Orlan Space Suit that was on board the International Space Station (ISS). The goal was to deploy two boxes housing the transmitter (a Kenwood TH-K2 HT) and micro-controller/electronics to be placed on top of the helmet and have the cosmonauts install the equipment in the Orlan space suit that was stored on the ISS. Prerecorded student greetings and video (SSTV) recordings along with 'voice' telemetry would be sent to the ground on two meters with the equipment powered by an Orlan Space Suit battery. The electronics were flown to the ISS by RSC-Energia on 8 SEP 05 and the cosmonauts installed the equipment on the surplus suit. [iii] Deployed in February 2006, SuitSat-1 (AO-54) became a media success as it was deployed from the International Space Station during an EVA. However, few amateurs heard the two-meter downlink signal because of a suspected issue with the antenna that was mounted on the space suit helmet. Once the battery depleted, the system went silent and later re-entered the atmosphere.

Despite the technical disappointments, the satellite project created the foundation for a follow on project (SuitSat-2) which would be a much more robust system. In Summer 2006, AMSAT agreed to build equipment for this significantly enhanced SuitSat, using much of the technology that subsequently flew on ARISSat-1 in 2011.

Key to the new design was the introduction of new technologies, such as the Software Defined Transponder, Maximum Power Point Trackers, Solar Panels, and SSTV cameras. In addition, the design called for four 'ports' to allow support for four experiments. This capability of incorporating experiments is a key feature since it allowed for provision for student (or other) experiments to be added to the mission.

A meeting between AMSAT and RSC-Energia took place at Goddard Space Flight Center in August 2006 followed by a follow-on meeting at Johnson Space Center in July 2007 which originally called for delivery of the SuitSat-2 equipment in Fall 2007. [iv] The delivery date was subsequently changed to Spring 2008.[v] Note that NASA Education was not a party to this program and that the conversations that took place were only between AMSAT and RSC-Energia with ARISS-I support.

For a variety of reasons, the SuitSat-2 project development process took significantly longer than originally expected, including software development issues and project management challenges. The decision to discard the surplus Orlan space suit in July 2009 required a major redesign of the project, including the need for a space frame to replace the Orlan space suit. The resulting design using the same solar panels (donated earlier by

Goddard Space Flight Center) dictated the size of the space frame to accommodate the solar panels.

Meanwhile, NASA took significant interest in the project as it recognized the potential for flying student experiments; a key capability that interested the ISS National Lab Education Project that was established after the SuitsSat-2 project was started. [vi] A Russian student experiment to measure the vacuum of space was agreed to be flown on SuitSat-2/ARISSat-1. With the addition of this experiment, the NASA ISS National Lab Education Project now viewed SuitSat-2/ARISSat-1 as a 'prototype' for flying student experiments. If the new design was successful, it would create a significant potential for flying US student experiments using a proven technology from AMSAT in future missions. Meanwhile, recognizing that it made sense to build multiple units at one time when building additional subsystems was relatively easy and costs were relatively low, AMSAT proceeded to build four additional ARISSats in addition to the primary flight unit even though there was no guarantee of future deployments. One unit was sent to Russia along with the flight unit to serve as a 'backup' and serve as a 'reference point' for RSC-Energia on the ground during the ARISSat-1/Kedr mission. This backup unit is to be returned to AMSAT once the mission is completed, which means that there are four units available for future flights should such opportunities arise.

A "Protocol-Roles & Responsibilities for ARISSat-1/Radioskaf-V" between NASA, RSC-Energia and AMSAT was first drafted in the Fall 2009 and signed in Spring 2010 that outlined the roles and responsibilities for each party. Key provisions regarding NASA's involvement included:

-NASA's point of contact shall provide oversight of the project for the ISS Program Office
-NASA shall lead safety reviews using Payload Safety Review Panel (PSRP) processes with participation from AMSAT and RSC-Energia.
-NASA shall conduct the re-contact analysis for deployment of the satellite
-NASA shall work with RSC-Energia and AMSAT personnel to jointly develop a joint integrated test plan schedule for the satellite
-NASA shall conduct export control certification and export control documentation of the satellite prior to shipment to RSC-Energia.[vii]

The introduction of NASA into this relationship was very helpful to AMSAT and the project for several reasons:

-It allowed AMSAT to hold technical discussions with RSC-Energia under NASA's existing Technical Assistance Agreement. Given AMSAT's experiences with ITAR self-reporting in early 2009 of potential ITAR violations, AMSAT was now well aware of ITAR. By having NASA personnel directly involved with all telephone calls and e-mail exchanges under their TAA, AMSAT was cleared of all potential ITAR issues with the Suitsat/ARISSat program.

-NASA agreed to handle all export licensing requirements and later agreed to cover the cost for the transportation of ARISSat-1 and the "backup" from the US to Russia by arranging for transportation to Russia. AMSAT delivered the flight hardware and backup to NASA Johnson Space Center in October 2010, and the responsibility for arranging for delivery of the hardware into Russia was no longer an AMSAT issue. This greatly simplified the logistics challenge since NASA had established procedures for shipping materials to Russia for subsequent delivery to RSC-Energia.

-ALL payloads destined for the ISS MUST go through a three phase Payload Safety Review Process (PSRP). By having NASA agree to work with AMSAT directly on this process and support the administrative work needed to prepare for it, NASA greatly made it much easier for a US-based satellite team to 'work the maze' versus coordinating with RSC-Energia to prepare for this review process. It also eliminated any potential ITAR concerns.

NASA's support of ARISSat-1 became extremely important, particularly as deadlines were missed by AMSAT and a voice was needed from outside of AMSAT to encourage RSC-Energia to continue with the program despite the schedule slippages. NASA, through the ISS National Lab Education Project realized that the technical complexity of ARISSat-1 was much greater than originally envisioned and saw the significant educational potential of this satellite. Mark Severance, N5XWF (ISS National Lab Education Project Manager) had spent time in Russia earlier in his NASA career and was familiar not only with the ISS Programs Office, but personally knew key RSC-Energia personnel which helped to maintain a level of communication with RSC-Energia that AMSAT would have likely failed to maintain on its own. RSC-Energia was not pleased with AMSAT's inability to deliver SuitSat-2/ARISSat-1 as promised which directly impacted their planned manifest of various Progress vehicles destined to the ISS as well as which Cosmonaut crew would do the actual deployment. Yet, RSC-Energia did continue to find space for ARISSat-1 as revised delivery dates were set.

Meanwhile, AMSAT's responsibilities under the protocol included:

- AMSAT shall designate management and technical points of contact to RSC-Energia and NASA for the ARISSat-1/Radioskaf-2 satellite project.
- AMSAT shall fabricate the ARISSat-1/Radioskaf-2 satellite
- AMSAT shall participate in the Payload Safety Review Panel (PSRP) reviews of the ARISSat-1/Radioskaf-V satellite. Data and documentation required by the PSRP for these reviews will provided by AMSAT.
-AMSAT shall work with RSC-Energia and NASA personnel to jointly develop a joint integrated test plan and schedule for the ARISSat-1/Radioskaf-V satellite. This integrated test plan will ensure the satellite's functionality prior to shipment from the United States, provide certification for flight on Progress, ensure the satellite's functionality prior to shipment from the United States, and functionality when onboard the ISS, prior to the EVA deployment of the satellite.
-AMSAT will provide technical input to RSC-Energia and the PSRP for the installation of the flight battery into the ARISSat-1/Radioskaf-2 satellite, procedural steps for

functional checkout of the satellite on the ISS prior to the EVA to deploy the satellite and procedural steps for the activation of the satellite during the RS EVA deployment task.
-AMSAT shall provide input to NASA for export control certification of the ARISSat-1/Radioskaf-2 satellite.

While the "Protocol-Roles & Responsibilities" clearly defined the expectations of the three parties with regard to construction, testing and delivery of ARISSat-1, and subsequent deployment, there were other expectations that were not in this document that did have an impact on the AMSAT-NASA relationship. As AMSAT was primarily focused on finishing the engineering project, delivering a satellite that met all of the requirements set forth (e.g. operational performance, safety certification for placement on the ISS, meeting vibration test requirements for placement in the Progress Cargo Vehicle for shipment to the ISS) AMSAT was not necessarily as focused on expectations as to how the satellite would be utilized by ground users to support STEM (Science, Technology, Engineering, and Math) and educational outreach once the satellite was deployed, beyond the software and hardware development of the spacecraft (e.g. SSTV imagery, voice greetings, telemetry download, etc.).

Back in 2007 when SuitSat-2 after first proposed, efforts were made to define educational outreach goals and to develop a team that would focus on these issues. This included ARRL and NASA Education personnel, reflecting the team that existed in support of ARISS school contacts. Traditionally, when looking at roles and responsibilities under the US ARISS School Contact roles and responsibilities, AMSAT has focused on operational management of the school contact, including management of mentors who work with schools, handling the technical aspects of the school contact with the ISS and developing the hardware used by the program. Lou McFadin, W5DID serves as ARISS Hardware Manager and has been involved with every piece of amateur radio hardware placed on the International Space Station.

Likewise, the ARRL and NASA Education have typically dealt with education outreach for ARISS, including school application review and selection, and evaluation of the education impacts of proposed school contacts. For the AMSAT leadership team, the understanding was that the education-based characteristics of ARISSat-1, including incorporation of the student greetings, voice telemetry, development of ground-based software programs for the Windows and Mac platforms that handles the decoding of both satellite and payload telemetry, were the areas that AMSAT contributed to the education outreach aspects of the project. AMSAT sees itself as an engineering organization focused on the design and construction of the satellite. Any additional education resources, such as curriculum development, providing resource materials to educators and students, and publicizing of these available resources to educators was presumed by AMSAT leadership to be the responsibility of NASA Education or the ARRL, just as was the case with the ARISS School Contact program.

Evolving Expectations

However, it became clear in mid-2010 that NASA had other expectations that were not documented but became more pronounced. While AMSAT was focused on finishing the satellite, NASA Education advised AMSAT that it expected AMSAT to provide education resources to schools as part of the justification for NASA's considerable support of the program. Whereas the ARISS School Contact program is considered a three-way relationship (NASA Education, AMSAT and ARRL), it now became more obvious that NASA was viewing AMSAT as the 'prime contractor' for ARISSat-1 and that it expected AMSAT to manage the development of ground-based education materials in support of ARISSat-1. Whether AMSAT had the in-house capability to develop these materials or worked with other organizations to develop such materials is up to AMSAT. Indeed, if AMSAT had to contract with individuals or other organizations to develop these materials was up to AMSAT (at AMSAT's expense).

In response to NASA JSC Education's request for ground-based education content to be placed on the arrissat1.org website, AMSAT did inform NASA Education that STEM-based educational materials would be made available. These materials would be suitable for both the current ARISSat-1 mission as well as any future ARISSat flights. AMSAT's thinking at the time was that materials that had been developed for SAREX and ARISS could be adapted to ARISSat-1 and that any additional needed materials could be developed.

It isn't clear to AMSAT as to the circumstances behind this evolving expectation. NASA Education has certainly experienced significant budget cuts, which likely means that they were no longer in the same position to develop educational content as they once were. Presumably, budget impacts may have driven a new expectation that AMSAT provide content specific to ARISSat-1 because NASA JSC Education was not in position to support this effort. While establishment of ISS National Lab Education Project provided funding that could be applied to support the deployment of ARISSat-1 as a prototype of a vehicle that could be used for future US student experiments, funding was not available for ground-based education content.

What also became clearer is that NASA JSC Education is being forced to justify the education dollars being spent. For example, ARISS is not the only means that provides students with a means to communicate directly with astronauts aboard the ISS; there are other programs using NASA communications assets that allow students to communicate directly with astronauts aboard the ISS as well. Given the competition for ISS National Lab Education Project funds and the need to justify the use of those funds, AMSAT and the ARISSat spacecraft design may well be competing with other organizations for NASA's support in the future as there may be other alternatives for placing student payloads in space using the ISS National Lab.

In addition, the amount of time spent by the ISS National Lab Education Manager dealing with ARISSat-1 issues as well as handling the logistics of delivering ARISSat-1 to Russia put pressure on him to justify the investment in ARISSat-1 by NASA JSC Education. The focus on 'education outreach' may have been one way for NASA JSC Education to justify their

current involvement beyond the desire to prove the concept of a spacecraft that could handle student experiments.

Consequently, it is in AMSAT's best interest to meet NASA JSC Education expectations on developing ground-based education content in support of STEM as well as providing the technical means of supporting the student payloads being flown.

ARISSat-1 Management Involvement Following Shipment to Russia

Once the ARISSat-1 spacecraft was delivered to NASA in October 2010, work continued to prepare the myriad of items needed to ensure that the satellite's educational impact was maximized given AMSAT's resources. Again, as primarily an engineering organization, our focus was on the development of outstanding technical items, including the ground station software (for both the PC and Mac platforms), creation of a website (www.arissat1.org), and preparing media articles for distribution. In early December, Lou McFadin, W5DID and Mark Steiner, K3MS flew to Moscow to assist Sergei Samburov, RV3DR with final testing and configuration prior to shipment to Baiknour for placement in a Progress Vessel 41P. Unfortunately, the shipment of the satellite was held by Russian Customs due to some apparent paperwork issues between the RSC-Energia and Russian Customs and pickup of the satellite containers by RSC-Energia wasn't allowed until after Lou and Mark had to fly back to the US the week prior to Christmas (Russia doesn't allow extension of visas once in the country). The satellite was finally released from Russian Customs following Christmas. Indeed, with RSC-Energia holiday shutdown from 1-10 JAN 11, Sergey had to mount the Kursk student experiment into the spacecraft and connect to the satellite's 9-pin connection, install the Orlan spacesuit battery, and do whatever testing/evaluation that could be done during the holiday period without direct AMSAT assistance on his own time since this was the holiday period. Subsequently, following removal of the Orlan battery and the flight antennas (to be replaced with dummy loads to protect the electronics from potential static charges during transit) the satellite was shipped to Baikonour 'on time' on 11 JAN 11, the day that RSC-Energia reopened and the last day that equipment for placement on Progress 41P were allowed to depart on a flight to Baikonour.

On 20 JAN 11 the third phase of the Payload Safety Review Panel (PSRP) took place in Houston. AMSAT had submitted documentation in preparation of the meeting and fully participated in the discussions that day. Thanks to the assistance of Claire Fredlund of Orbital Sciences who had taken AMSAT's documentation and formatted the material to meet PSRP documentation requirements, we were fully prepared for the review. The end result of the review was that AMSAT was expected to modify seven hazard reports that remained open pending corrections and updates (including information to be provided by RSC-Energia), but that there were no "action items" required. In essence, once AMSAT resolved some administrative work, the satellite was approved for shipment to the ISS and deployment. [viii]

Meanwhile, AMSAT was well aware of the need to put out information to the amateur radio and general public concerning the upcoming deployment from the ISS in February 2011. Dave Jordan, AA4KN wrote an article on ARISSat-1 that was published in the February

2011 issue of QST in anticipation of EVA-28 scheduled for 17 FEB 11. Dave also led our efforts to develop press releases for general release to aviation, space, and general public publications.

ARISSat-1/Radioskaf-V was shipped to the ISS on 28 JAN 11 on Progress 41P. Once the satellite was onboard the ISS, AMSAT was informed by RSC-Energia of their intention to perform 'operational tests' of the satellite prior to EVA-28. These operational tests were not part of the three-way protocol signed in Spring 2010. As part of the original negotiations of the Protocol, AMSAT had expressed strong reservations about the appropriateness of such 'tests' when RSC-Energia first raised the issue since no provision had been made in the design of the spacecraft to accommodate such tests from within the ISS where there are severe RF constraints and the potential for damage to the spacecraft was possible. References to such tests were removed from the final Protocol, yet apparently RSC-Energia believed such tests were necessary to give them confidence of the satellite's operational capability despite the ground tests that were conducted by Sergey, RV3DR. Consequently, the 24-hour 'operational test' was scheduled for the period 10-13 FEB 11 just prior to the anticipated deployment on 16 FEB 11.

In anticipation of these tests, AMSAT provided RSC-Energia with feedback to the proposed operating plan for the test, reviewing the proposed procedures to minimize potential adverse impacts to the satellite that we had never expected would be activated (battery only) while within the ISS.

Note that during this timeframe in Winter 2011, the ARISSat-1 team leadership, including the Project Manager (Gould Smith, WA4SXM), the ARISS Hardware Manager (Lou McFadin, W5DID), Tony Monteiro (AMSAT VP-Engineering) and President (Barry Baines, WD4ASW) along with our NASA partners (primarily Mark Steiner, K3MS and Mark Severance, N5XWF) were focused extensively on dealing with external parties on technical questions and issues even though the satellite itself had been completed and shipped to NASA in October 2010. The need to focus on these critical issues took away time for the ARISSat-1 team to work on ground-based 'educational content'. Clearly, the team was heavily weighted with engineering talent but didn't have depth with regard to ground-based educational outreach. Only Gould Smith, WA4SXM had a teaching background and understood what was needed to be incorporated into documentation that teachers would find helpful. At the same time, development of the www.arissat1.org website materials mostly fell on Gould, who developed much of the content that was subsequently placed on the site. A key concern was the evolving ground station software which not only had to be technically successful, but also sufficiently 'user friendly' with appropriate documentation to make it ready for 'prime time'.

Following the 'tests' that took place on board the ISS in February, AMSAT was informed that the deployment would not take place as scheduled the following week. This decision was made not in response to the test results, but apparently the desire to have the satellite onboard the ISS during the upcoming Yuri Gagarin 50th anniversary commemoration in April 2011.

Consequently, while we were surprised by RSC-Energia's decision to remove the ARISSat-1 deployment from the schedule of work and concerned about the ramifications of not being deployed during EVA-28, the decision did provide AMSAT with additional time to prepare materials desired prior to deployment which was now expected in August during the next EVA. For example, the ground station software was refined and eventually made available on the www.arissat1.org website.

What AMSAT was unsuccessful in accomplishing was developing specific materials suitable for educators for use in the classroom based upon ARISSat-1's capabilities. During the 2011 Dayton Hamvention, AMSAT reached out to the ARRL for potential assistance, but their resources were already allocated to summer teacher programs. Our review of existing resources on various NASA sites did not seem to meet our needs. We reached out to several AMSAT volunteers in August, shortly after the ARISSat-1/Kedr deployment on 3 AUG 11 to help us develop materials, but to date they have not provided materials.

Results to Date

This lack of specific education material placed on the www.arissat1.org website has been noted by NASA JSC Education. They have expressed their disappointment. We have acknowledged our inability to date to develop and post such materials, but we have documented the extensive impact of ARISSat-1 on ground users. On 30 SEP 11, a report was submitted to NASA JSC Education by AMSAT that summarized the extensive worldwide interest in ARISSat-1/Kedr:

-As of 28 SEP 11, over 700 "Certificates of Recognition" awarded under three different categories: Secret Word Contest, SSTV reception, or Voice Telemetry reception.

-As of 28 SEP 11, the Ground-based software developed by Douglas Quagliana, KA2UPW/5 (Windows Platform) and Gilbert Mackall, N3RZN (Macintosh Platform) has been used by 258 stations worldwide to provide 133,800 telemetry frames since deployment on 3 AUG 11. Only about 1/3 of the stations are in the US. Since deployment, on average there were 49.5 stations per day that were forwarding telemetry data to the telemetry ftp site in August and 48.6 stations per day in September. This ground network of volunteer telemetry receiving stations provided data for both the Kursk Experiment as well as spacecraft telemetry, clearly demonstrating ARISSat-1's ability to support student payloads not only with the technology on board the spacecraft but also ground-based stations to receive it and forward the information to a central site via the internet. This success speaks well to the ability of amateur radio operators to support potential ARISSat missions.

-As of 28 SEP 11, over 2,700 SSTV images received by ground stations have been forwarded to the ARISS SSTV Gallery site, again demonstrating the wide coverage and interest in supporting ARISSat missions. The images themselves have generated interest as a variety of shots from the satellite's four cameras have captured various images of the Earth.

-Various 'contests' have been initiated to generate interest in the satellite. This includes the 'Chicken Little Contest' (estimate when the satellite will dip to 78 KM, thus initiating events to re-enter the atmosphere) and a 'CW Contest' ('decode' six of the 220 amateur radio call signs transmitted on the CW beacon; each call sign is of an individual who has made a difference for amateur radio in space).

-A survey of ARISSat-1 users was initiated by Steve Bible, N7HPR using 'Survey Monkey'. In the first week alone, over 500 responses were given with 10% of the respondents identifying themselves as teachers or students. At the 2011 AMSAT Space Symposium, Steve will provide updated statistics as the survey continues to be publicized around the world.[ix]

Next Steps

As this paper is finalized on 6 OCT 11, ARISSat-1 continues to function only in daylight due to the loss of the Orlan Battery (which, as anticipated, failed early in the mission, but fortunately failed in an 'open' configuration) and the amateur radio linear transponder is functioning despite damage to the 70 CM receive antenna which occurred prior to actual deployment. The 'educational value' of the satellite has been diminished somewhat due to the inability to collect an entire orbit's worth of data for the Kursk Experiment (Reset of the system in eclipse happens because of loss of the battery), but all other aspects of the satellite remain, such as the SSTV image downloads and voice and data telemetry of the spacecraft's status is still being sent. At this point, the satellite may well function right up to the point where the satellite re-enters the atmosphere.

AMSAT continues to address the need for 'educational content'. We're hopeful that volunteers who were not available over the summer may now find time to prepare materials. Individuals who have indeed used ARISSat-1 in an educational environment may now be in position to write about their experiences. We continue to scope for materials on the Internet. Improving our educational content several months after deployment of ARISSat-1/Kedr is important for several reasons:

-The current satellite continues to function and we must provide materials to support the current mission. Indeed, given the experience enjoyed to date with ARISSat-1/Kedr, we know that some educators have already used this satellite in their classrooms. See: http://www.dowagiacnews.com/2011/09/13/passionate-principal-stokes-science-interest/

As these examples become known, hopefully their experiences can be shared.

-NASA JSC Education will judge AMSAT not only for materials available at time of deployment, but continued efforts to improve what is currently available at www.arissat1.org.

- Materials developed today or in the near future are certainly applicable to potential future ARISSat missions. It would be both AMSAT's and NASA Education's

best interests to have an existing library of materials already developed should a follow-on ARISSat mission be endorsed. The more that AMSAT can accomplish now during the flight of ARISSat-1, the less development work for educational outreach will be needed later. In the eyes of NASA Education, their evaluation of the ARISSat concept is based upon AMSAT providing unique capabilities, not only in terms of engineering (e.g. supporting student payloads), but extending STEM in other ways as well.

One constraint that we're now dealing with is with the size of the corps of volunteers and their availability. Unfortunately, ARISSat-1 Project Manager Gould Smith, WA4SXM came down with a serious medical situation this Fall that has forced him to focus on health issues as he recovers from surgery. As a small all-volunteer team, AMSAT doesn't necessarily have the 'team depth' to deal with personnel issues when a critical member is no longer available for a period of time.

Second, recent personnel changes at NASA Education at JSC means that we have not yet had a conversation with NASA about their interpretation of the success of ARISSat-1 from their perspective. Hopefully, that initial feedback will be provided later this year.

Lessons Learned

Details on lessons learned from AMSAT's experience with ARISSat-1/Kedr from an engineering design and engineering project management perspective has been noted elsewhere. The focus of this paper is on other areas relating to our work on the educational component of ARISSat-1/Kedr as well as describing the challenges that AMSAT has experienced in developing 'education outreach' skillsets:

1. The need for documentation of agreements between organizations to clearly define expectations and roles/responsibilities.

Clearly, NASA's desire for AMSAT to develop ground-based educational content was not clearly understood initially, either in terms of relative importance or in terms of evaluating the 'success' of ARISSat-1. No formal agreements were signed addressing these issues. With AMSAT's inability to date to develop appropriate materials, this failure has future connotations in terms of NASA's estimate of AMSAT abilities.

2. An "Education Team" approach is necessary to cover the broad range of possibilities under 'education outreach'.

Creating a new 'education outreach' capability within an existing organization can be difficult. Our efforts from 1999-2008 with the Director-Education position demonstrated that it is unlikely that one individual has the time or experience to deal with all levels of education and generate materials appropriate for these new relationships. The needs of a university (which may be focused on a cubesat project, for example) are fundamentally different than the needs of other education levels.

A 'team leader' who has a passion for working with students at all levels, is capable of recruiting and establishing a team of individuals that can handle the education outreach 'grunt work', and can work within the 'education establishment' is needed to guide AMSAT in this new environment.

3. AMSAT must reach out to broaden the volunteer base.
The technical challenges of ARISSat-1 and the resulting delays in delivery of the spacecraft created disappointments with RSC-Energia. AMSAT's lack of significant progress on 'educational outreach' is another reflection of the need to improve AMSAT's ability to manage a process and develop the resources to meet expectations; in this case, in the area of education.

AMSAT is in need of volunteers who understand the needs of educators and how to develop materials that would be suitable for guiding teachers to take advantage of amateur satellite resources (whether satellite-based or ground-based) to incorporate into their existing educational goals OR to create after-school opportunities for student activities. For example, how can the telemetry of ARISSat-1 now stored on a ftp site, but utilized to encourage analysis of the satellite's health?

4. The scope/cost of a satellite program goes beyond "Nuts and Bolts".
Traditionally, AMSAT is dependent upon volunteers to create our 'products'. The definition of 'product' must now expand beyond "satellite hardware and software" to include ground-based systems, whether in terms of software (for telemetry support) or creating 'educational content'.

5. If AMSAT is considered a 'prime contractor' for a NASA-supported project, AMSAT must enter into formal relationships with organizations and/or individuals regarding 'deliverables'.

This means, for example, that AMSAT may need to look to professional education content providers and pay them to develop the appropriate resources to meet NASA expectations if qualified volunteers with time to devote to these efforts cannot be recruited to meet project deadlines. One option to cover this expense would be to apply for educational grants. This, too, requires some expertise to develop quality proposals.

6. The potential 'payoff' of such non-satellite investments can be substantial.
In the past, AMSAT has entered into agreements with organizations to provide a product in exchange for a launch opportunity. For example, in the case of Phase-3D (AO-40), as part of the launch agreement AMSAT designed the SBS (Specific Bearing Structure) for mounting of the Phase 3-D spacecraft inside of it and bear the weight of the primary payload above it. Such a design would be of benefit to the European Space Agency (ESA) for Ariane 5 heavy lift future missions. The SBS was built by two different US organizations (Weber State and a small outside company of former Weber State personnel) and delivered to ESA along with the satellite.[x]

In a similar vein, the cost of providing 'education products' can be looked at in two complementary ways: a) fulfilling AMSAT's long standing mission/vision to support space education and b) fulfilling part of the 'cost of doing business' as far as potential launch opportunities are concerned. The unique capabilities of the ARISSat design coupled with ground station support by amateurs and supplemented by 'education content' aimed at educators and students becomes the 'package' that in turns provides an opportunity to put amateur radio assets in orbit via the ISS. This approach is significantly less expensive than paying for full launch costs of AMSAT's satellites (particularly given the size and capabilities of ARISSat versus a cubesat) and provides a potential means for keeping recurring assets in orbit, even if there are limitations to the low earth orbit used by the ISS. In other words, even if our membership doesn't embrace the need for space education from a mission/vision perspective, education outreach provides a pathway to space that AMSAT can 'afford' which significantly enhances the incentive for AMSAT to establish the skillsets and products for 'education outreach' that meets the expectation of a launch provider.

7. AMSAT must recognize the possibility that it is competing for NASA Support
Given shrinking NASA Education dollars, NASA is carefully evaluating how those dollars are spent and what is received in return for their 'investment.' While the ISS National Lab Education Project is tasked with finding ways to bring student experiments to the ISS, there are certainly various means that this task can be fulfilled. While AMSAT has developed a vehicle that can support student payloads, is that enough to convince NASA to support future ARISSat missions? If AMSAT fails to provide the 'education content' that NASA is looking for, it provides an opening for other organizations to demonstrate their ability to meet NASA expectations that AMSAT has not. Given the significant amount of resources that it takes for NASA to place a payload on the ISS, NASA expects that organizations that it works with to provide the maximum benefit for that investment.

Other Opportunities

While this paper has focused on the importance of education outreach on the AMSAT-NASA relationship as it developed with regard to ARISSat-1, there are other educational outreach opportunities that we need to keep in mind as we look for launch opportunities. This includes:

1. **Working with Universities**
While a number of universities have worked on cubesats, it is becoming increasingly clear that success rate of these satellites is relatively small. Universities are interested in seeing their payloads/experiments placed in orbit and gaining the data from their payloads. This opens the potential for AMSAT to provide satellites with 'This space for rent' where the AMSAT-university relationship provides potential launch opportunities. It is this approach that we're pursuing with Project Fox in terms of creating a spacecraft that can support suitable relationships and qualify for launches.

2. **Qualifying for Launch Grants**

NASA is starting to support launch opportunities for university cubesat programs. AMSAT has convinced NASA that 'not-for-profits' should also be considered candidates for such opportunities as well. We expect to submit our application for such an opportunity to support Fox-1 later this Fall. We will need to meet the same criteria for selection as educational institutions. See:
http://www.nasa.gov/directorates/heo/home/CubeSats_initiative.html

Summary

It is clear that the costs of 'conventional' launches for satellites larger than cubesats are beyond the current financial means of AMSAT. ARISSat-1/Kedr, as a prototype for a new class of satellites that can support student payloads, provides a unique 'alternative' launch opportunity that will depend upon AMSAT's ability to provide 'educational content' in support of ISS National Lab Education Project goals. This includes creating education content suitable for students and educators.

AMSAT's success with ARISSat-1 from a technical perspective certainly reflects our engineering capabilities. Clearly, the satellite has met our technical objectives, including demonstration of the SDX (Software Defined Transponder) concept, our ability to provide telemetry by ground stations around the world using the new BPSK-1000 data format created by Phil Karn, KA9Q and the SSTV imagery from the four cameras. Where ARISSat-1 has lacked is meeting the expectations of NASA JSC Education to date regarding teacher and student educational content based upon the capabilities of ARISSat-1. While we have a number of successful programs with ARISSat-1, such as the "Reception Certificates", we have not met NASA JSC Education expectations regarding 'STEM' (Science Technology Engineering Math) when it comes to helping teachers use ARISSat-1 as a teaching tool within a curriculum. AMSAT needs significant help to develop such materials because of the limitations of using volunteers who are qualified to develop these materials and have the time to create them.

On a broader note, AMSAT's future is contingent upon our ability to attract the next generation of satellite builders. Nurturing the next generation of satellite builders may well depend upon the experiences that students have in school and the encouragement they receive to pursue careers in science, technology, engineering and math (STEM). It could well be the case that AMSAT's ability to succeed in educational outreach will have an impact on AMSAT's future.

In the near term, this inability to create appropriate content to date may come back to hinder our ability to seek future ARISSat flight opportunities using assets that AMSAT has already built. We must continue to work in these areas as long as ARISSat-1 is operational and figure out how to continue the effort in order to help justify future ARISSat flights. If you have experiences in using ARISSat-1/Kedr in the classroom, or you're interested in developing educational materials, and/or you're interested in helping AMSAT to establish an effective educational outreach program, please don't hesitate to contact me.

[i] Bylaws of the Radio Amateur Satellite Corporation, amended 1989
http://www.amsat.org/amsat-new/AboutAmsat/documents/bylaws.php
[ii] "Minutes of the Spring 2004 BOD Meeting, 23 FEB 04"
[iii] Bauer, Frank "This is SUITSAT-1, Amateur Radio Station RS0RS!!", AMSAT Journal November/December 2005, pp. 23-26.
[iv] "Protocol for July 11-13 2007 SuitSat2 Discussions"
[v] McFadin, Lou "Suitsat-2/Radioskaf-2: The second Amateur Radio Space Suit project and stepping stone to future small amateur satellites", Proceeedings of the 2007 AMSAT-North America Space Symposium and General Meeting October 26-28, 2007 Pittsburgh, PA, pp. 109-121
[vi] ISS National Lab was established by Congress to encourage entities outside of NASA to conduct research onboard the ISS, as well as educational experiments and activities. The ISS National Lab Education Project, based at JSC, encourages student experiments and activities which utilize the ISS as an educational venue. The potential for student experiments to be deployed from the ISS on ARISSat spacecraft offers unique opportunities.
[vii] Protocol-Roles & Responsibilities for ARISSat-1/Radioskaf-V" April 2010
[viii] "Payload Safety Review Panel: Amateur Radio on the International Space Station Satellite-1 (ARISSat-1), Phase III Flight Safety Review, Minutes of Meeting, January 20, 2011". p.1
[ix] E-Mail B.A. Baines to D.B. Biggs, NASA Education on 30 SEP 11, "ARISSat-1 Report for NASA Education 30 SEP 11", compiled from various reports
[x] Tynan, William "AMSAT: The First Forty Years", 2009 pp. 29-32

How to **Light** the Candle

Nick Pugh ars K5QXJ

k5qxj@amsat.org

Abstract

This paper will present threats to our hobby and our nation. It will lay out choices AMSAT members can make and will explain what the educators and concerned citizens in South Louisiana are doing to make a real difference. It will examine specific ongoing projects that are taking place today and will happen in the next year or two. It will also challenge all of us in our hobby to pick up the torch and light a candle.

Getting Serious

Below is a survey done by the ARRL canvassing the membership in the Delta Division.

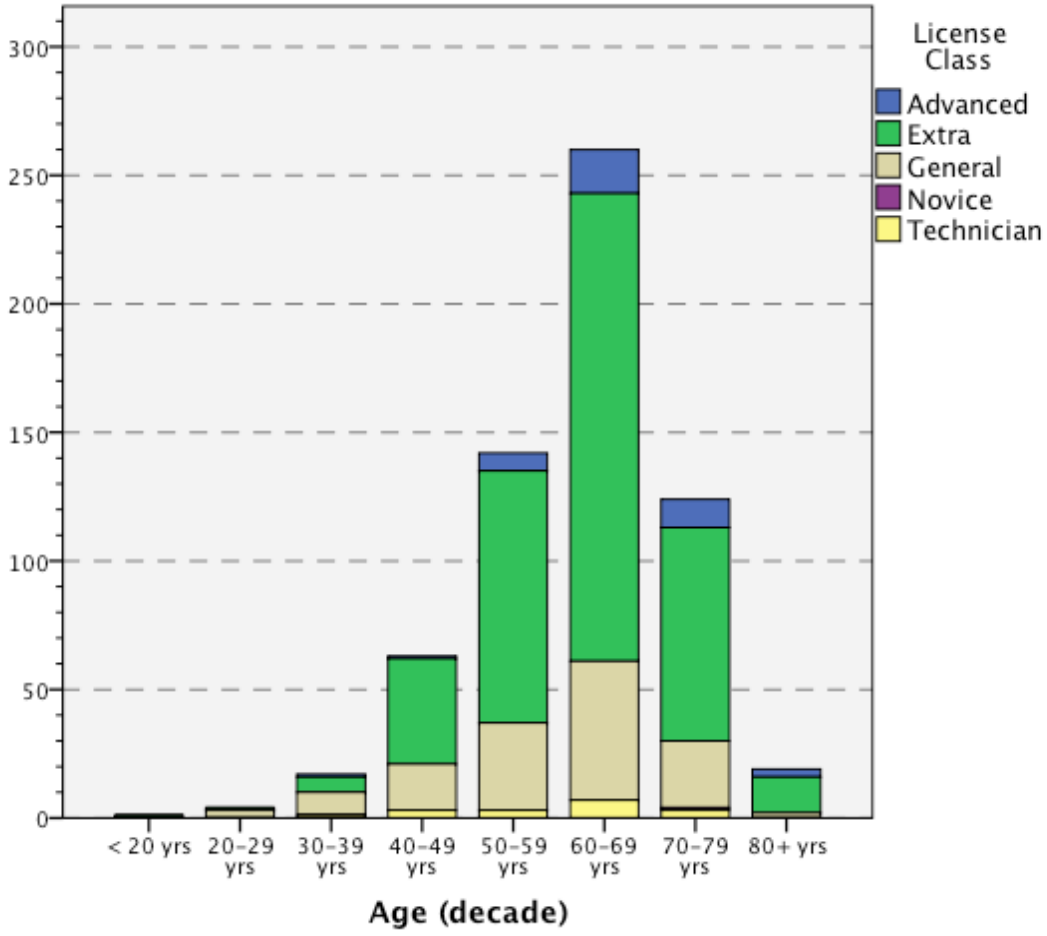

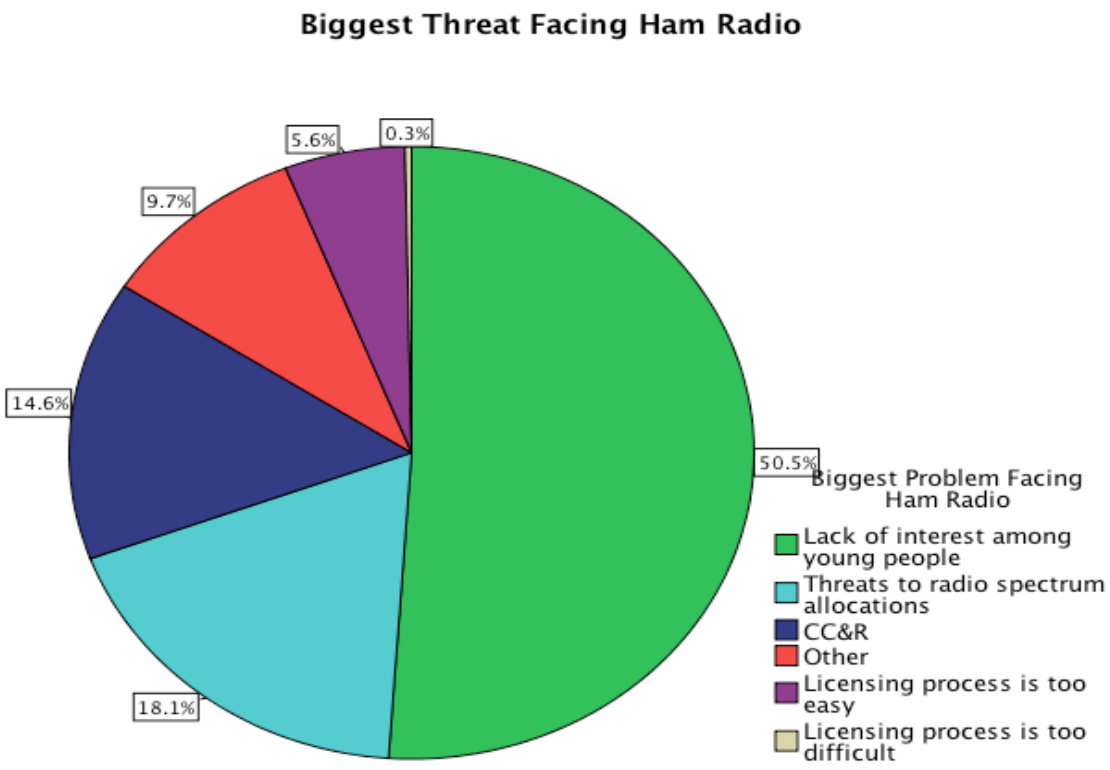

This data, in the author's opinion, is valid for the country as a whole. It clearly shows that the ham population is aging and if we canvassed the AMSAT origination, the same demographics would also apply. The second data shows that the group as a whole has also figured out why the membership is not growing. The lack of interest by the next generations in math and science, again in the author's opinion, foretells a pending disaster faced by our children and grandchildren. All of us have been blessed with our great hobby and now we are faced with two choices.

Curse the darkness
or
Light a candle

Most of us, including the author, were not endowed with the horsepower by our creator to become Nobel Laureates, however, all of us have the capacity to ignite the fires of those few who are gifted. Some of those people who have that horsepower are Karl Jansky, the father of radio astronomy, Joe Taylor an astrophysicist, and Jocelyn Bell for her discovery of pulsars. Someone, a mentor, got them interested in radio. One of the author's wishes is on its' way to final orbit. It can be said he lit a few fires along his way. We need to produce tinkers.

What are tinkers?

You might be a tinker if you plugged yourself in the wall as a toddler.

You might be a tinker if you figured out the hard way what a fly back transformer is.

You might be a tinker if you no longer have feelings in your fingertips.

You might be a tinker if you built something that smoked.

You are a tinker if you smoked a part on purpose.

The rest of this paper describes projects that are ongoing in Southwest Louisiana to produce tinkers.

Handheld project

Most of us have handheld radios and one of the easiest ways to demo ham radio is to bring a handheld radio in the classroom and let the students talk on the radio. It turns out that just talking across town is just as exciting as talking across continents. The demo can be enhanced by using ECHOLINK . The author usually puts out a request for help on the AMSAT BB and normally gets a few hams to come up and talk to the students. As it turns out, the distance on these contacts are several thousand miles. It would have been more exciting if a DX station would volunteer. When the word gets out please volunteer your help especially if you are on a different continent.

Hand Held plus Satellite

AMSAT now has ARISSAT-1 on orbit and if you hurry you can take a handheld out in the school yard and demo a handheld receiving a satellite on a rubber duck antenna. This link is fairly marginal but add a WA5VJB cheap Yagi antenna and you have a good neat demo that will excite most students and teachers.

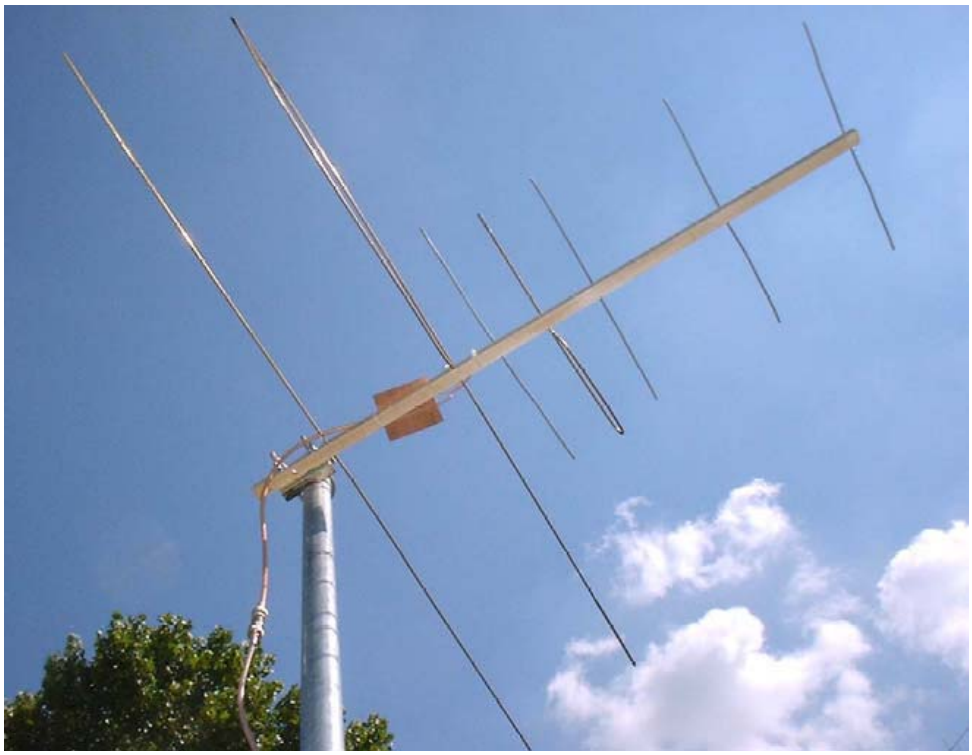

Demonstrating using LEO satellites poses some challenges. A student's day is very structured and the satellite passes don't exactly match the student's day. ARISS' time to live is measured in months so if you plan to use this satellite you have little time to waste. The good news is there will be three follow-on satellites. They are Fun Cube, Fox and CAPE all of which will have similar payloads to ARISSAT.

Remember, the only hardware you need is probably already lying around your shack. Another easy demo is do digi through the ISS. This requires a radio with a built-in TNC like the Kenwood 700 series or a two meter hand held radio and software TNC.

It is the author's opinion that the sizzle of a hands-on satellite demonstration is the catalyst needed to get students to tune in, have fun and learn.

Fun Cube Dongle

This is a great little device produced by our British cousins.

This is a receiver that covers 65 MHz to 1.7 MHz and cost about $ 150. Howard tells us that he will produce an educational device for about ½ that cost. This is a device that plugs into a USB port and you plug an antenna in the other end. With this device and a simple ground plain antenna you can decode weather pictures from the NOAA satellites. The software to decode the weather satellites is freeware.

PearlSats Project

This is an experiment designed for middle school students. The students can chose any object they want to that can fit inside a ping pong ball. We attach their ping pong balls to a weather balloon and fly them to near space approximately 100,000 feet. We recover the ping pong balls for the students to learn some science.

Some of the experiments they can run are to divide seeds into two groups. One is a control group to keep in the classroom while the second group is flown up to altitude and exposed to high vacuum, higher radiation, and extreme cold. The students can then plant both groups in their classroom and observe the effects of near space. This project adds the sizzle in science class exposing our young to the fact that doing science can be fun. Done right, these experiments can help perfect their writing and speaking skills.

On several occasions we have teamed up with Professor Bob Twiggs at Morehead State where the students will present the results of their findings via the internet. You might say we don't fly weather balloons in our community. There are many balloon groups around the country that will fly your pearl sats. One of the groups, EOSS (url http://www.eoss.org/), flew 8 balloons in one day and recovered all 8 without incident.

Arduino Project

One of the neatest devices is a micro controller called Arduino .

This microcontroller cost $30 or if you buy a clone about ½ that. This device has:

- On board programmer
- 13 general I/O pins
- 6 Analog inputs
- PWM out puts
- I2C buss
- SPI buss
- 3.3 v to 12 v input power
- USB or RS232 input

This device is well documented on the web and has tons of freeware that is easily a copy, paste and run exercise.

The CAPE team from the University of Louisiana went into a Title 1 school and in an 8 week period got the students to design a UV detector to fly on a weather balloon.

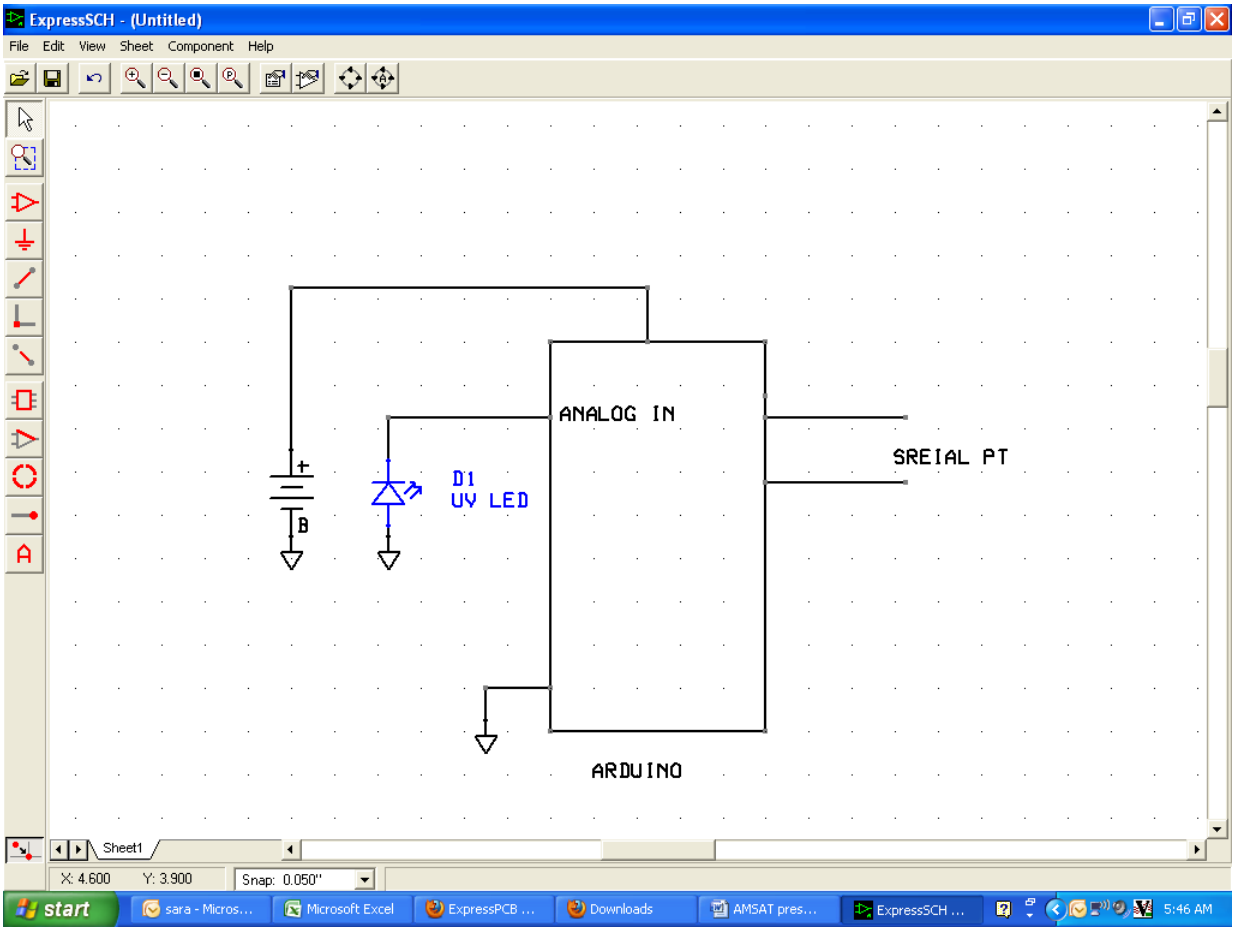

Schematic of a UV Detector

This is sample code to read a UV sensor

UV=analog.Read (0);

Serial.Print(UV);

This unit was flown as a payload on one of the balloons that went to near space. The students are able to program these devices with no prior programming experience. The students that are exposed to projects like this find themselves far ahead of their peers when they get to college. Devices like this can get students to start to tinker. Tinkering is one of those very descriptive terms that in the author's experience helps students develop a curiosity that enhances their knowledge of the fundamentals and enhances the learning process.

Capstone Projects

The accreditation committee ABET is requiring all seniors to complete a capstone project as a requirement for graduation. ABET is strongly recommending that these projects be mentored by industry. Most schools do a good job teaching the fundamentals. Almost any student knows Ohms Law and can immediately parrot it back when asked.

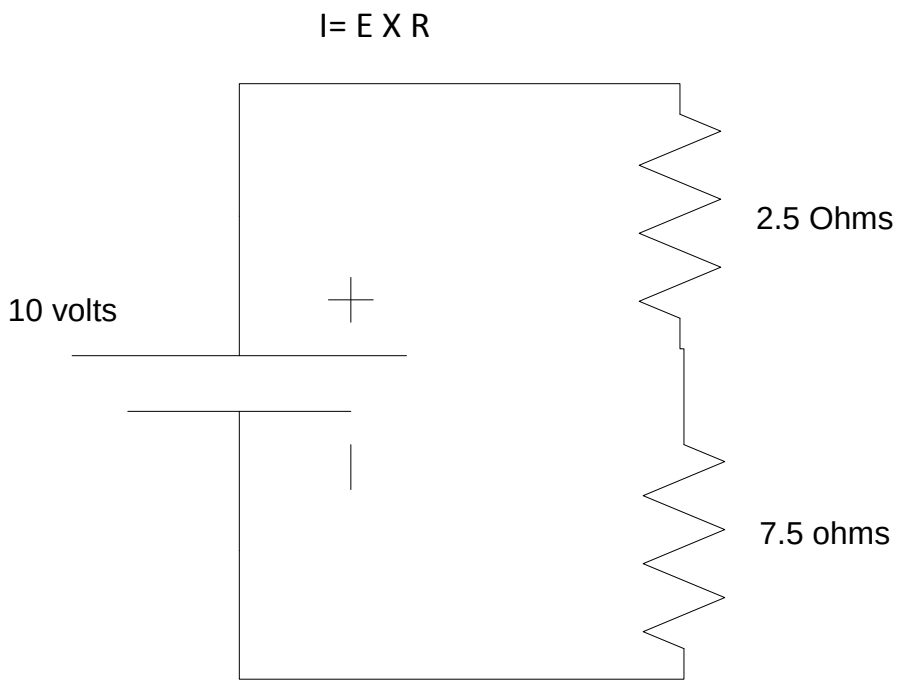

But, if you give the circuit shown above, a few will struggle to tell you the current flowing in the resistors is 1 amp in less than 30 seconds. If you ask the students what is the voltage across the bottom resistor, most will grab a calculator and take several minutes to answer the question. A few of our graduating engineers cannot answer this question. These students were exposed to Ohms law in there physics class and in their electronics I classes and two labs where Ohms law was demonstrated. Here is where you can help. These students need the mentoring from us who have worked with our hands and minds and earned the gray hair most of us have now.

These students, given a little guidance, can take on projects that AMSAT can put on our satellites. These students have good software skills and all they need is good projects and a little encouragement to begin to understand what has taken us decades to learn. The accreditations committee wants industry feedback given to the educators in assessing how well they are teaching and it is our job to give constructive feedback.

Mentors have a special advantage. We are not bound by political correctness and we cannot be fired. Our schools are graduating engineering students who are not prepared to compete on the world stage.

Summary

It is time for all of us in this organization to get off dead center, get involved, make a difference and light a candle.

SA AMSAT CubeSat Project "KLETSKous"

Hans van de Groenendaal, ZS6AKV*
SA AMSAT

SA AMSAT is designing and building a CubeSat with two objectives in mind:

- To promote satellite operation amongst the general amateur radio population in Southern Africa and

- To give Radio Amateurs in Southern Africa easy access to a Low Earth Orbit (LEO) satellite on as many of the available passes as possible.

SumbandilaSat SO67 created great expectations in South Africa but after the main payload, an imager, was activated, amateurs in South Africa had very few passes available to them. These passes were mainly to the west and consequently did not give good access. On the other hand the satellite was popular in the US, Europe and Australasia where during the week there were several passes scheduled for their area on a daily basis. SA AMSAT received may enthusiastic reports.

More about the project name – KLETSKous is an Afrikaans word meaning chatterbox. We want our amateurs to talk and operate more via satellite! It is unlikely that once launched that the name will remain "KLETSKous"

Payload

While it is considered that a 2m uplink and 70 cm downlink is desirable from an user perspective, the team recognises the IARU Satellite advisory panel's recommendation that two metre uplinks are problematic in many parts of the world as there are too many non-amateur applications that may interfere. If we stick to the VU mode is would mean that a tone access system would be required. We found that newcomers to satellites do not like tone access and given that most hand-held transceivers sold today are both 70cm and 2 m capable, the problem of non availability of 70 cm transmitting equipment is fast diminishing.

A linear UV transponder with a bandwidth of 20 kHz has been decided on as it can be utilised for FM and SSB.

However switchable tone access is being considered. Over Southern Africa the tone access will be switched off to give Amateurs with modest equipment easy access to the satellite. For the rest of the world where the Amateur population is denser, tone access may be introduced to reduce unwanted interference even on a 70 cm uplink.

For educational purposes a beacon and parrot functionality may be highly desirable but with a small power budget and limited space it may not be possible.

Project to support SAiSAT

There is another satellite being designed called SAiSAT – the “i” stands imagination. SAiSAT is also a CubeSat but it will have fold out solar panels. The architect of the project is John Willescroft, ZS6EF, who is assembling a team of post graduate engineering students to work on the project, possible as part of their Master’s or PhD studies. A light sensor for SAiSAT will be included on the KLETSKous platform to perform vital measurements required for one of the SAiSAT projects. This experiment will study the phenomena of photon coincidence.

Photon Coincidence

Photons emitted in the process of spontaneous parametric down conversion of pump light in a nonlinear crystal are made the basis of a new optical communication scheme, which depends on the fact that two down converted photons are always produced simultaneously. If the pump light is modulated and the down converted photons are transmitted in two separate beams which fall on two separate detectors, registering their simultaneous arrival allows great discrimination against background and noise to be achieved. Communication is possible with relatively few photons and even when the signal is ordinarily lost in the noise, so that the communication channel can be made virtually interception proof. The feasibility of the scheme is demonstrated by a pilot experiment.

© 1985 Optical Society of America

KLETSKous Design Philosophy

The original plan was to buy out many of the components which would typically include the airframe, solar panels, batteries, the battery charger controller and the passive magnetic stabiliser system. Our first investigation showed that beside the high cost there are technical issues that do not allow the mix and match of components from different suppliers. We are now working with the Cape Peninsula University of Technology to learn from their experiences with their one unit CubeSat which carries a 14 MHz beacon.

House Keeping

A Command Link will be required for housekeeping purpose and also possible in-flight reprogramming of the onboard controller, although this is risky business as the satellite may be killed if the reprogramming is unsuccessful. The best option would be to launch the satellite with flawless software already loaded, if at all possible.

A Scheduler will switch the transponder On and Off at pre-determined times that will correlate to certain areas being over flown by the satellite. The Scheduler will also determine when the Access Tone will be required. It will be possible to set the onboard clock of the Controller to ensure that the Scheduler performs correctly.

A Telemetry Downlink will be required. Some of the parameters that must be monitored on the ground include battery voltage and temperature. A “squelch counter” that counts the amounts of time that the transponder’s squelch was broken may give an indication of the activity through the satellite, especially if it is time stamped.

A team that has been developing telemetry and command structures for a balloon experiment called HABEX (High altitude Balloon Experiment) is developing this subsystem of KLETSKous.

Power Budget

A typical 1U CubeSat will have 12 solar panels (2 each on the 6 facets of the cube). When stabilised by a passive magnetic system the solar panels will have a typical efficiency of about 28% at the start of their lives and for a typical orbit will have 2.7 W "orbit average" and 3.6W "sunlit average" power available. After some time in space the efficiency will fall to about 21% and the available power budget will decrease to 2W and 2.7W respectively. The final values will be very dependant on the orbit selected. When the batteries eventually fail the satellite should be able to function when it is in sunlight.

With this amount of power available the maximum RF output of the satellite cannot exceed 0.5 W. There may be instances where the output power will have to be reduced to 200 mW or less.

Stabilisation

It will be difficult to implement active stabilisation in a 1U package together with the transceivers required for the main payload. A passive (magnetic) stabiliser should keep the antennas adequately stable during a pass over Southern Africa. This is also the road followed by FunCube.

Transponder Development

Currently the main focus is on the development of the transponder. The project leader is Jacques Roux, ZS1ADC. The first prototype PC boards are being manufactured and initial evaluation will start soon.

Opportunities for mode UV transponders to be included in the ARMC project

The African Resource Management Constellation (ARMC) is a collaboration currently involving Nigeria, South Africa, Kenya and Algeria. Initially conceived around 2004, when it was named the African Resource and Environmental Management Satellite Constellation, the initiative was meant to develop a constellation of satellites to provide real time, unrestricted and affordable access to satellite data to support effective environmental and resource management in Africa. On 7 December 2009 during the Third African Leadership Conference on Space Science and Technology for Sustainable Development held in Algiers, Algeria, an agreement was signed. Nigeria has already launched a satellite as part of the constellation.

At the IAC 2011 held in Cape Town in October 2011 South Africa reaffirmed its commitment to build a satellite to become part of the constellation. SA AMSAT has already approached the South African National Space Agency (SANSA) to have an experimental payload in the form of a UV transponder to be included on the South African ARMC satellite. Although no final contracts have been awarded the CEO of SANSA indicated that SunSpace (the company that built SumbandilaSat) is a likely contender. He did confirm that the satellite will be built in South Africa.

So while ultimately KLETSkous may take longer to build and find a suitable, affordable launch the pressure is on to have a UV transponder and its associated command and telemetry structure completed.

The project leader for KLETSKous is Hannes Coetzee ZS6BZP, who was the main engineer responsible for the amateur payload on SumbandilaSat (SO67)

*zs6akv@amsat.org

Follow the progress on www.amsatsa.org.za

ARISS and Education:
Who will join AMSAT in 2031?

Mark Steiner, K3MS
Rosalie White, K1STO
Debbie Brown Biggs

October 2011

Why is education important?

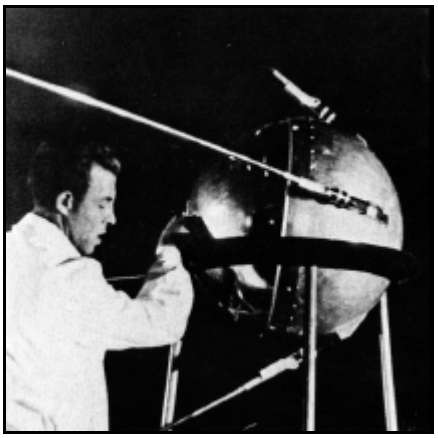

- AMSAT had its beginnings in the early days of the Space Age, when human-made satellites were still in their infancy
- Many of our members recall becoming interested in technology when Sputnik was launched, ushering in a new age

Technology today

- Current youngsters have grown up with technology and the Space Age as routine parts of their lives, and society does not necessarily hold up the value of being technology developers as opposed to just technology consumers

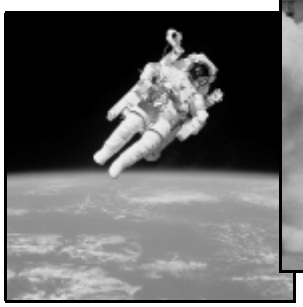

Education: still important

From NASA's Education website* -

> NASA will continue the Agency's tradition of investing in the Nation's education programs and supporting the country's educators who play a key role in preparing, inspiring, exciting, encouraging, and nurturing the young minds of today who will be the workforce of tomorrow.

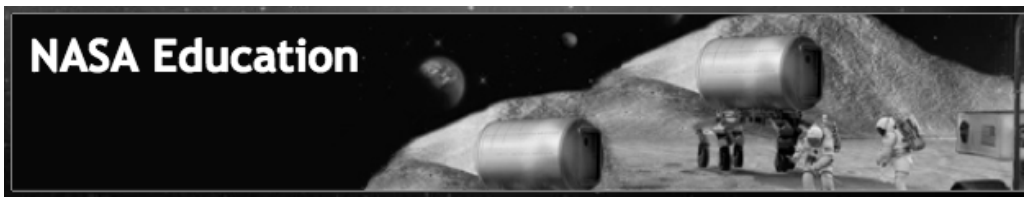

* - http://www.nasa.gov/offices/education/about/index.html

Amateur Radio on the International Space Station (ARISS)

What is ARISS?

- International program that inspires students, worldwide, to pursue careers in science, engineering and mathematics through communication with the ISS on-orbit crew via amateur radio
- Local community drawn into this once-in-a-lifetime human spaceflight pursuit
- Provides an experiment platform for new telecommunications techniques
- Promotes interest in the amateur radio (ham radio) hobby as a link to better engage students in science and math

NASA recognizes the unique capability of amateur radio to engage the public, and in particular our students, in activities that inspire their interest in Science, Technology, Engineering, and Math – STEM

Amateur Radio on Human Spaceflight Missions

Since 1983, teams in the U.S. (SAREX), Germany (SAFEX) and Russia (MIREX), have worked with the space agencies to fly amateur radio and to support Educational Outreach on:

Space Shuttle

ISS

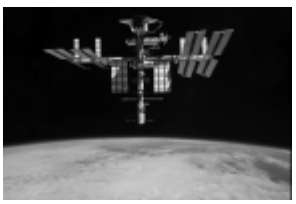

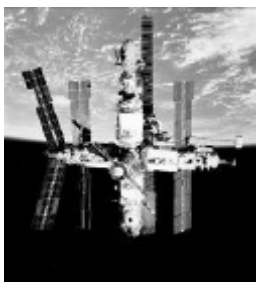

Mir

ARISS Objectives

Spark Student's Interest
In Science & Technology

Crew Family Contacts
(Crew Psychological Ops)

Promote Interest
In Amateur Radio

Human Spaceflight
Awareness

Experimentation

Development & Operations on the International Space Station (ISS)

Working with our international partners to develop & operate Amateur Radio on the International Space Station (ARISS)

ARISS Team

- Nine international partners thus far—Belgium, Canada, France, Germany, Italy, Netherlands, Japan, Russia and the United States
- MOU—Formed ARISS to represent the amateur radio community to the ISS Program
- All volunteer team

USA Sponsors

LOGO.049

National Aeronautics and Space Administration (NASA)

- Provides resources (people, money, and volume and time on the ISS)

AMSAT and the ARRL provide resources (volunteers and paid employees, flight and test hardware, and the use of amateur ground stations)

AMSAT

Radio Amateur Satellite Corporation (AMSAT-NA)

American Radio Relay League (ARRL)

NASA and ARISS Education

- Over the past few years NASA Education has been told by Congress to focus more on gathering information on the outcomes of its programs

- Not good enough to just do stuff, must measure what is actually being accomplished

- This has led the JSC Education Office through its Teaching from Space projects to emphasize more than ever the educational content of all its projects, including ARISS

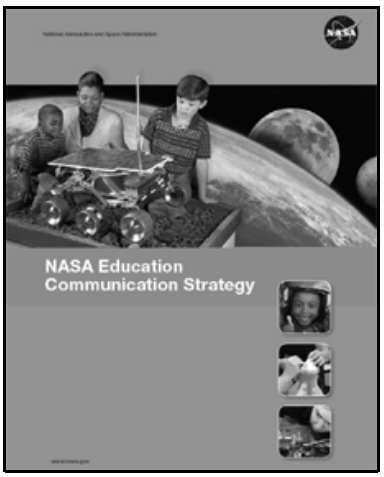

Spring 2011: A New Beginning

- Teaching from Space issued a call for proposals to over 18,000 people and institutions
  - Invited them to take advantage of amateur radio contacts with the ISS
  - Proposers to concentrate on the educational program that surrounds the contact, not the particulars of the contact itself
- This opened up the opportunity for AMSAT and ARRL to reach out to the selected schools to help them even more with educational resources and with the technical implementation of the contact, using their technical strengths
- 5 primary and 10 alternate schools and institutions selected
  - Currently in the process of preparing for potential contacts to occur mid-January 2011 through mid-July 2011

Continuing series of proposals

- This November the request for proposals will go out for the next six month window
- Information on the process can be found at http://www.nasa.gov/audience/foreducators/teachingfroms .
- Details can be obtained by sending an email to the NASA Johnson Space Center's Teaching from Space office at JSC-TFS-ARISS@mail.nasa.gov

How can you help?

- Become a mentor or help a selected local organization through the process of preparing for and pulling off the contact itself

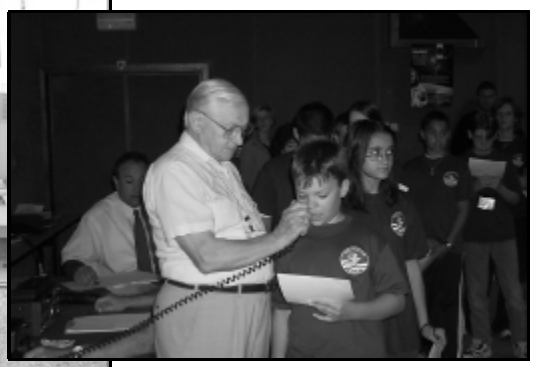

AMSAT in 2031…

- In 20 years, will there be enough men and women in STEM careers to keep the US on the competitive edge of technology development?
- In 20 years, will AMSAT have people interested enough in technology to want to get involved and keep the organization alive?
- In 20 years, will there be some bright young engineer about whom you can say:

"I helped them get their start in the technical field when they became interested in STEM during an ARISS contact that I helped make happen!"

For further information

- ARISS: www.ariss.org
- NASA Education:

http://www.nasa.gov/offices/education/about/

- Mark Steiner, K3MS: k3ms@amsat.org